PROJECT	ENGINEER
SAMPLE PROJECT IN LONDON	
DOCUMENT NO.	REVISION
STR-CALC-615	0
TITLE	Pages
METAL BALUSTRADES	57

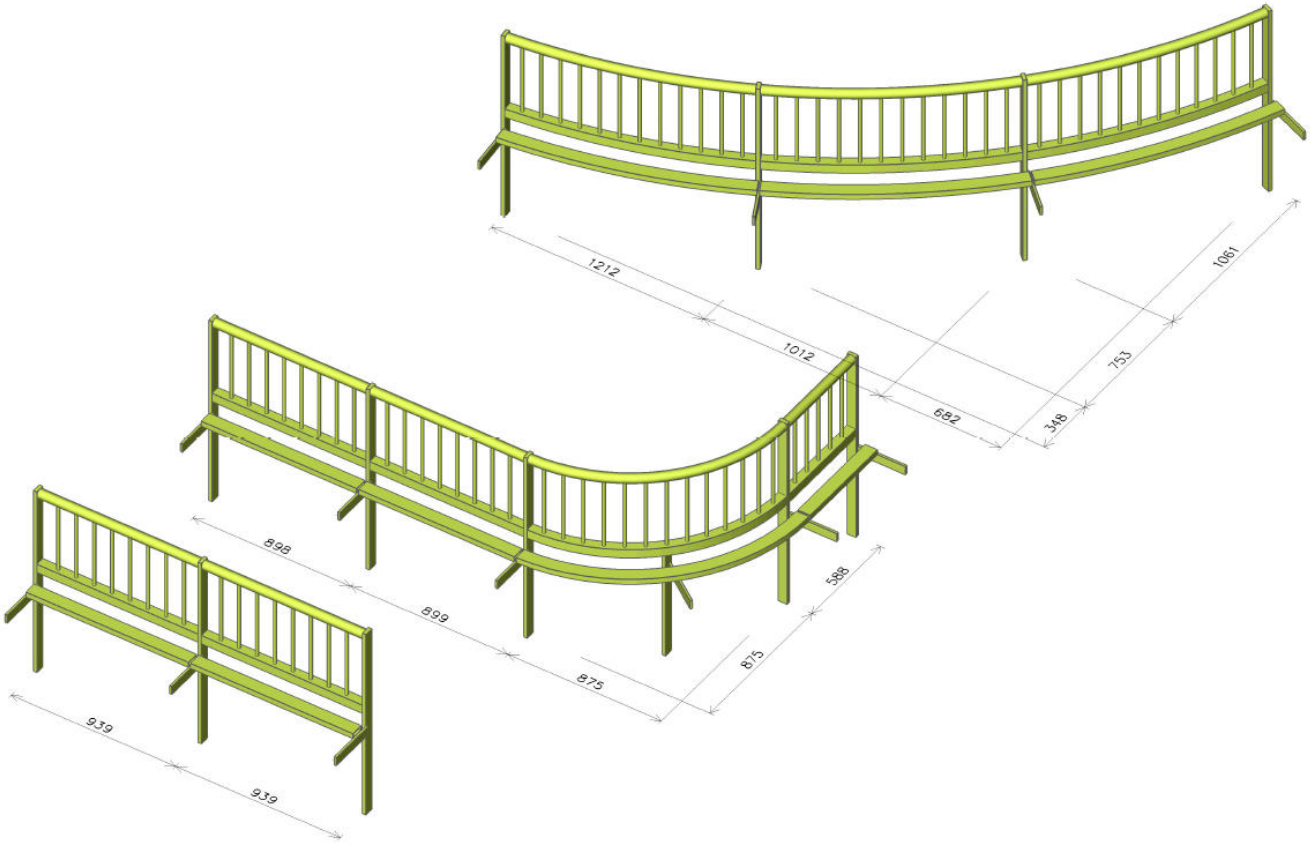

LETTENWEG 118, 4123 ALLSCHWIL, SWITZERLAND
TEL.: +41 (0)61 501 8210 / +41 (0)79 508 1651
REGISTERED IN SWITZERLAND | VAT REGISTRATION CHE-437.605.665

Contents

1 Basic Data

1.1 References

1.1.1 Norms and Standards

[1] BS EN 1990:2002, Eurocode – Basis of structural design.

[2] BS EN 1993-1, Eurocode 3 – Design of steel structures – Parts 1, 4 & 8.

[3] BS EN 1999-1, Eurocode 9 – Design of aluminium structures – Parts 1 & 4

[4] CWCT:2005, Standard for systemised building envelopes, Parts 2 & 3.

[5] CWCT TU14, Technical update on Load combinations.

1.1.2 Document Reference

[6] Lindner. *D262-LFL-SW-TYP-CL-F-1401: Loads and load combinations.*

[7] Wintech. *Performance Specification for the Installation of Curtain wall.* Rev. M, 24 October 2014.

1.1.3 Software

[8] Nemetschek. *SCIA Engineer v.14.0.* Structural Analysis & Design Software for Construction and Engineering.

1.2 Loads

The following loads are in accordance with load report [6].

1.2.1 Dead Load (D)

Selfweight of the framing profiles are generated by the software Scia [8].

1.2.2 Imposed/live load (L)

The most onerous of the following when combined with other loads in accordance with load report [6].

i Vertical load to internal ledges and horizontal members/surfaces

Point load, $Q_{Iv,k}$	=	*1.0*	*kN*	
Uniform pressure, $w_{Iv,k}$	=	*0.6*	*kN/m²*	

ii Barrier horizontal loads

Line load, $q_{Ih,k}$	=	*0.74*	*kN/m*	*- applied at a height of 1.1m above FFL*
Point load, $Q_{Ih,k}$	=	*0.5*	*kN*	*- applied within a height of 1.1m above FFL*
Infill load, $w_{Ih,k}$	=	*1.0*	*kN/m²*	*- applied within a height of 1.1m above FFL*

1.2.3 Wind load (W)

Net pressure, w	*=+/-2,04*	*kN/m²*	

1.2.4 Thermal load

Sumnmer, T_1	=	*+65*	*°K*
Winter, T_2	=	*-25*	*°K*

2 Typical balustrade

2.1 Typical Detail

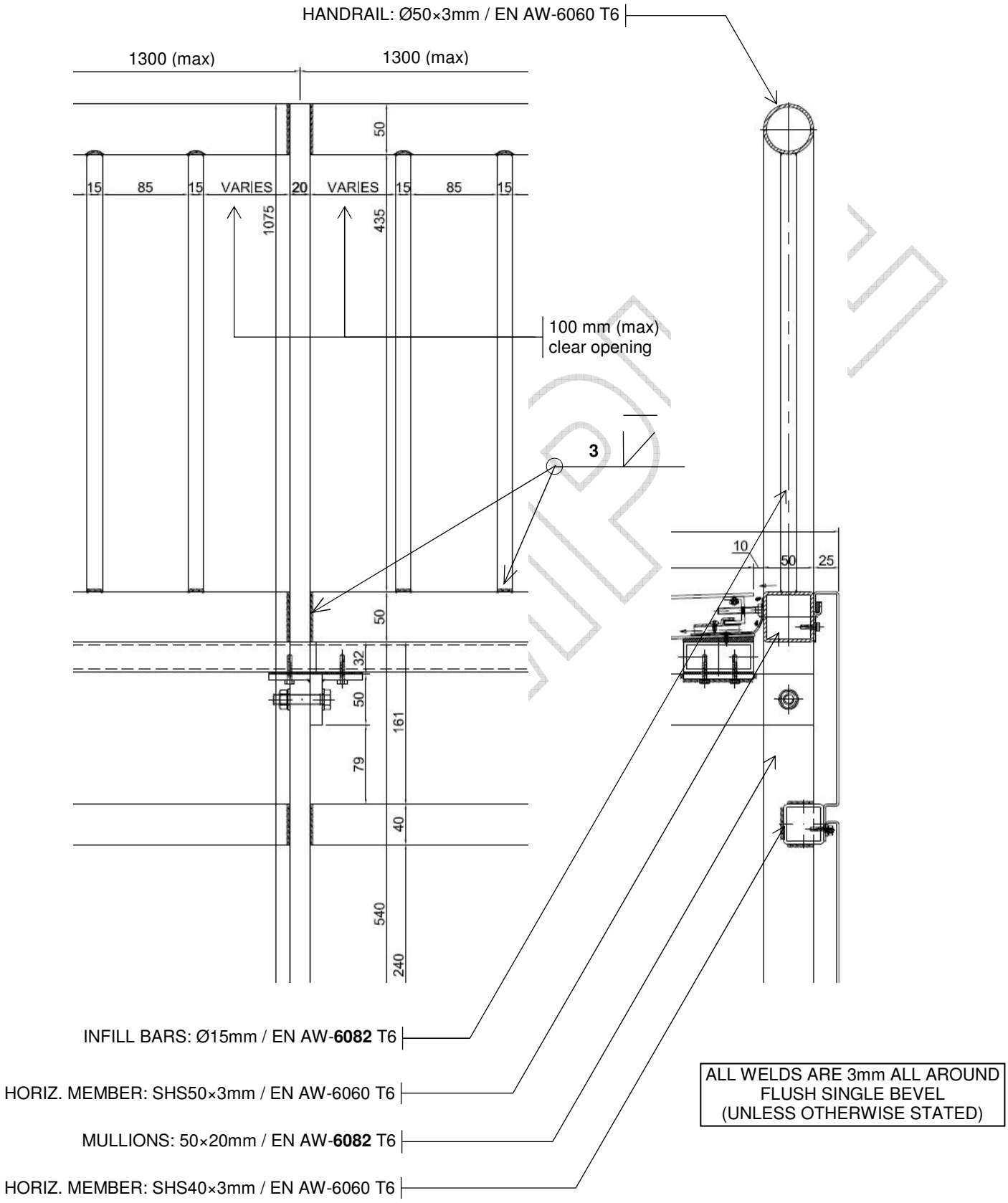

2.2 Members check

2.2.1 Handrail

Max. span, L	=	1.3	m	
$M_{Ed} = 1.5 \cdot 0.74 \cdot 1.3^2 / 8$	=	0.23	kN·m	

Ø50×3mm / EN AW-6060 T6

W_{el}	=	4.8	cm^3	
I	=	11.6	cm^4	
$M_{el,Rd} = 4.8 \cdot 140 / 1.1$	=	1.32	kN·m	0.17 < 1.0
$\delta = 5 \cdot 0.74 \cdot 1300^4 / (384 \cdot 210000 \cdot 116000)$				
	=	1.13	mm	

2.2.2 Mullion

Cantilever, L	=	0.65	m	
$H_k = \max\{0.74 \cdot 1.3; 0.5\}$	=	0.96	kN	
$M_{Ed} = 1.5 \cdot 0.96 \cdot 0.65$	=	0.94	kN·m	

Flat 50×20mm / EN AW-6082 T6

$M_{pl,Rd} = 1.2 \cdot 20 \cdot 50^2 / 6 \cdot 250 / 1.1$	=	2.27	kN·m	0.41 < 1.0
$\delta = 960 \cdot 600^3 / (3 \cdot 70000 \cdot 12 \cdot 50^3 / 20)$				
	=	2.63	mm	

2.2.3 Check overall deflection

Overall, $\delta \leq \min\{600/65; 15\}$	=	9.23	mm	
Overall, $\delta = 1.13 + 2.63$	=	3.76	mm	0.41 < 1.0

2.2.4 Infill bars

Max. span, $L = 460 - 25$	=	435	mm	
$M_{Ed} = 1.5 \cdot 0.5 \cdot 435 / 4$	=	75.94	kN·mm	

Ø15mm / EN AW-6082 T6

W_{el}	=	0.33	cm^3	
I	=	0.25	cm^4	
$M_{pl,Rd} = 1.2 \cdot 0.33 \cdot 250 / 1.1$	=	90.0	kN·mm	0.84 < 1.0
$\delta \leq 435/65$	=	6.69	mm	
$\delta = 500 \cdot 435^3 / (48 \cdot 70000 \cdot 2500)$	=	4.90	mm	0.73 < 1.0

2.3 Type Flat Balustrade

Refer to structural analysis results in section 2.3.3.

2.3.1 Deflection check

δ_{max}	=	4.4	mm	
δ_{allow} = min{1100/65; 15}	=	15.0	mm	**0.29** < 1.0

2.3.2 Stress check to BS EN 1999-1-1

i Vertical members

Max. Von mises stress, σ_{max}	=	58.2	N/mm^2	

EN AW-6082 T6

$\sigma_{HAZ,Rd}$ = 0.5·250/1.1	=	125.0	N/mm^2	**0.46** < 1.0

ii Horizontal members

Max. Von mises stress, σ_{max}	=	38.9	N/mm^2	
Max. HAZ stress, σ_{HAZ}	=	28.2	N/mm^2	

EN AW-6060 T6

$\sigma_{el,Rd}$ = 140/1.1	=	127.27	N/mm^2	**0.30** < 1.0
$\sigma_{HAZ,Rd}$ = 0.43·140/1.1	=	54.73	N/mm^2	**0.52** < 1.0

2.3.3 Structural analysis – Type flat balustrade

NEMETSCHEK Scia	Project	The Corniche, London
	Part	BAL-102 Type Flat
	Description	Aluminium - Welded assembly
	National code	EC - EN

1. Structural model

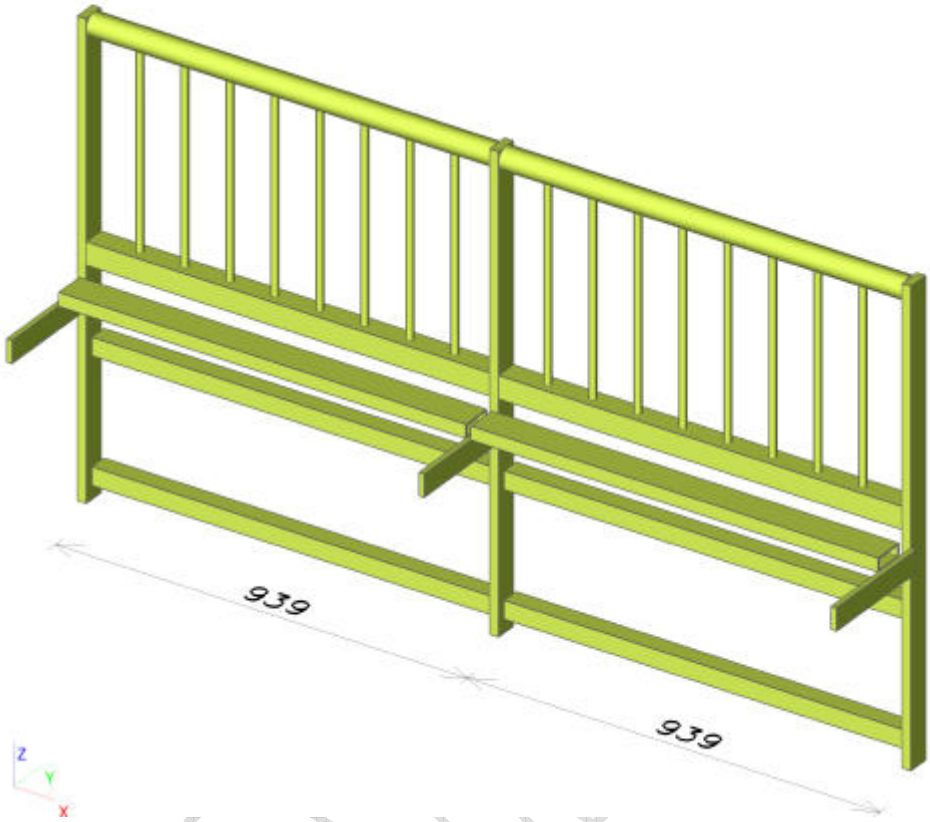

1.1. Analysis model

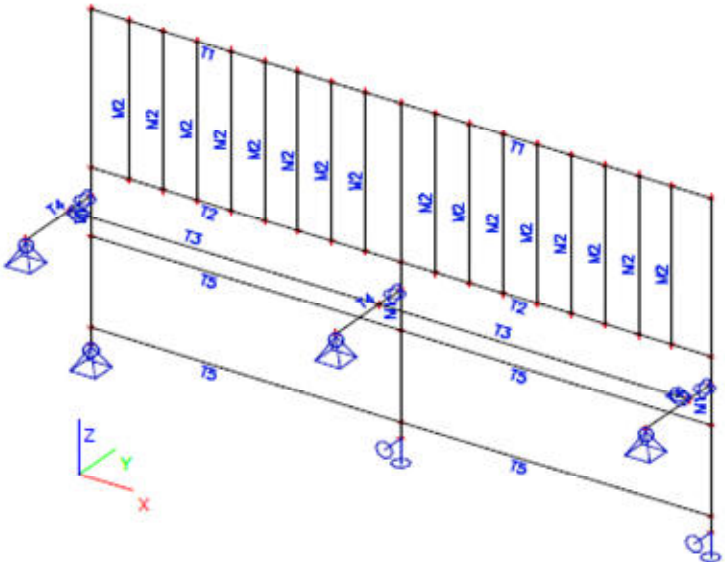

CASTLE
LETTENWEG 118, 4123 ALLSCHWIL, SWITZERLAND
TEL.: +41 (0)61 501 8210 / +41 (0)79 508 1651
REGISTERED IN SWITZERLAND | VAT REGISTRATION CHE-437.605.665

NEMETSCHEK Scia	Project	The Corniche, London
	Part	BAL-102 Type Flat
	Description	Aluminium - Welded assembly
	National code	EC - EN

1.2. Materials

Name	Type	Unit mass [kg/m³]	E mod [MPa]	Poisson - nu	G mod [MPa]	Thermal exp [m/mK]
EN-AW 6060 T6	Aluminium	2700.00	7.0000e+04	0.3	2.6923e+04	0.00
EN-AW 6082 T6	Aluminium	2700.00	7.0000e+04	0.3	2.6923e+04	0.00

1.3. Cross-sections

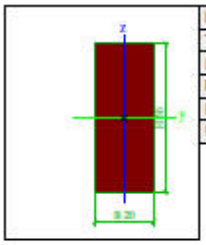

Name	M1	A [cm²]	10.00	
Type	Rectangle	A y, z [cm²]	8.33	8.33
Detailed	50; 20	I y, z [cm⁴]	20.83	3.33
Item material	EN-AW 6082 T6	I w [cm⁶], t [cm⁴]	3.59	9.95
Fabrication	general	Wel y, z [cm³]	8.33	3.33
Use 2D FEM analysis	✓	Wpl y, z [cm³]	12.50	5.00
		d y, z [mm]	0	0
		c YUCS, ZUCS [mm]	10	25
		α [deg]	0.00	

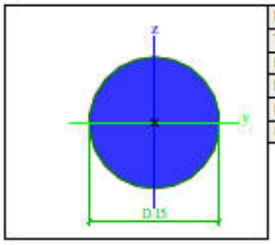

Name	M2	A [cm²]	1.77	
Type	Circle	A y, z [cm²]	1.59	1.59
Detailed	15	I y, z [cm⁴]	0.25	0.25
Item material	EN-AW 6082 T6	I w [cm⁶], t [cm⁴]	0.00	0.50
Fabrication	general	Wel y, z [cm³]	0.33	0.33
Use 2D FEM analysis	✓	Wpl y, z [cm³]	0.56	0.56
		d y, z [mm]	0	0
		c YUCS, ZUCS [mm]	7	8
		α [deg]	0.00	

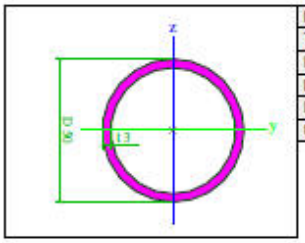

Name	T1	A [cm²]	4.43	
Type	Tube	A y, z [cm²]	2.97	2.97
Detailed	50; 3	I y, z [cm⁴]	12.28	12.28
Item material	EN-AW 6060 T6	I w [cm⁶], t [cm⁴]	0.00	23.96
Fabrication	extrusion	Wel y, z [cm³]	4.91	4.91
Use 2D FEM analysis	✓	Wpl y, z [cm³]	6.64	6.64
		d y, z [mm]	0	0
		c YUCS, ZUCS [mm]	25	25
		α [deg]	0.00	

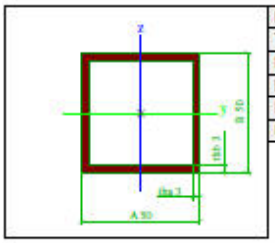

Name	T2	A [cm²]	5.64	
Type	O	A y, z [cm²]	2.90	2.90
Detailed	50; 3; 50; 3	I y, z [cm⁴]	20.85	20.85
Item material	EN-AW 6060 T6	I w [cm⁶], t [cm⁴]	0.09	30.69
Fabrication	extrusion	Wel y, z [cm³]	8.34	8.34
Use 2D FEM analysis	✓	Wpl y, z [cm³]	9.95	9.95
		d y, z [mm]	0	0
		c YUCS, ZUCS [mm]	25	25
		α [deg]	0.00	

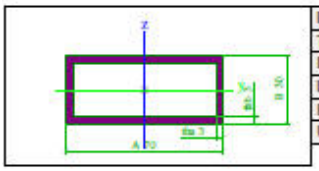

Name	T3	A [cm²]	5.64	
Type	O	A y, z [cm²]	3.92	1.78
Detailed	70; 3; 30; 3	I y, z [cm⁴]	8.38	33.32
Item material	EN-AW 6060 T6	I w [cm⁶], t [cm⁴]	7.98	20.67
Fabrication	extrusion	Wel y, z [cm³]	5.58	9.52
Use 2D FEM analysis	✓	Wpl y, z [cm³]	6.53	12.17
		d y, z [mm]	0	0
		c YUCS, ZUCS [mm]	35	15
		α [deg]	0.00	

CASTLE
LETTENWEG 118, 4123 ALLSCHWIL, SWITZERLAND
TEL.: +41 (0)61 501 8210 / +41 (0)79 508 1651
REGISTERED IN SWITZERLAND | VAT REGISTRATION CHE-437.605.665

NEMETSCHEK Scia	Project	The Corniche, London
	Part	BAL-102 Type Flat
	Description	Aluminium - Welded assembly
	National code	EC - EN

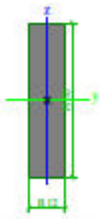

Name	T4	A [cm²]	6.00	
Type	Rectangle	A y, z [cm²]	5.00	5.00
Detailed	50; 12	I y, z [cm⁴]	12.50	0.72
Item material	EN-AW 6060 T6	I w [cm⁶], t [cm⁴]	1.16	2.44
Fabrication	general	Wel y, z [cm³]	5.00	1.20
Use 2D FEM analysis	✓	Wpl y, z [cm³]	7.50	1.80
		d y, z [mm]	0	0
		c YUCS, ZUCS [mm]	6	25
		α [deg]	0.00	

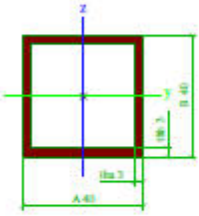

Name	T5	A [cm²]	4.44	
Type	O	A y, z [cm²]	2.31	2.31
Detailed	40; 3; 40; 3	I y, z [cm⁴]	10.20	10.20
Item material	EN-AW 6060 T6	I w [cm⁶], t [cm⁴]	0.04	15.12
Fabrication	extrusion	Wel y, z [cm³]	5.10	5.10
Use 2D FEM analysis	✓	Wpl y, z [cm³]	6.17	6.17
		d y, z [mm]	0	0
		c YUCS, ZUCS [mm]	20	20
		α [deg]	0.00	

Name	Mass [kg]	Surface [m²]	Volume [cm³]
Total results :	25.90	2.553	9593.56

Material	Mass [kg]	Surface [m²]	Unit volume mass [kg/m³]	Volume [cm³]
EN-AW 6060 T6	13.90	1.756	2700.00	5147.54
EN-AW 6082 T6	12.00	0.796	2700.00	4446.03

2. Loads [kN, kN/m]

2.1. LC1 - D: Dead load

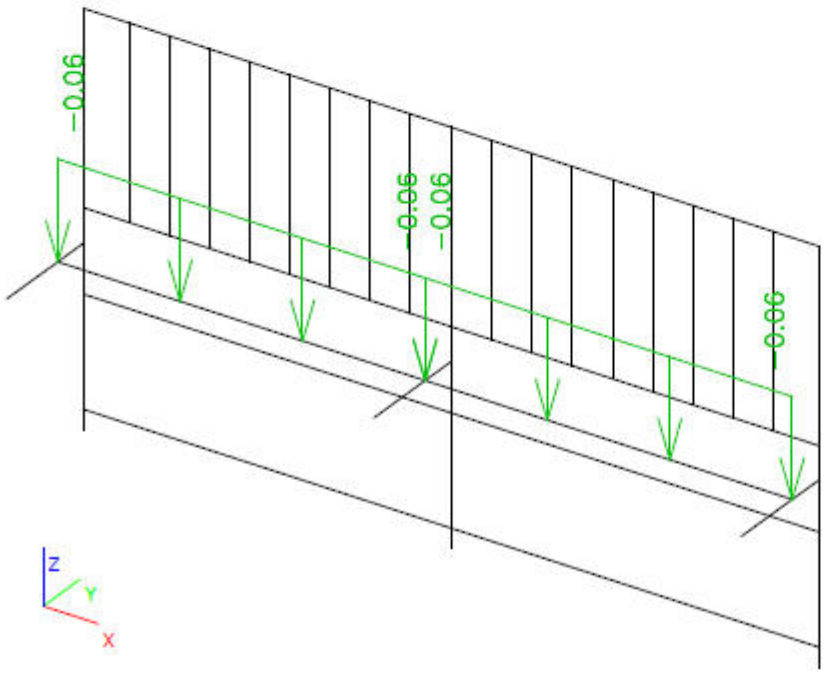

CASTLE
LETTENWEG 118, 4123 ALLSCHWIL, SWITZERLAND
TEL.: +41 (0)61 501 8210 / +41 (0)79 508 1651
REGISTERED IN SWITZERLAND | VAT REGISTRATION CHE-437.605.665

NEMETSCHEK Scia	Project	The Corniche, London
	Part	BAL-102 Type Flat
	Description	Aluminium - Welded assembly
	National code	EC - EN

2.2. LC2 - I: Imposed load

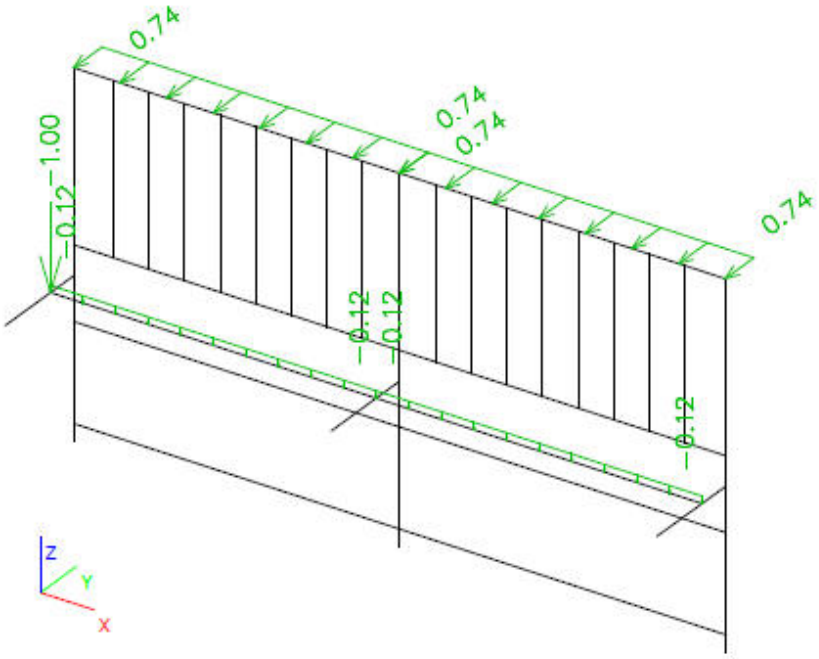

2.3. LC3 - W: Wind load

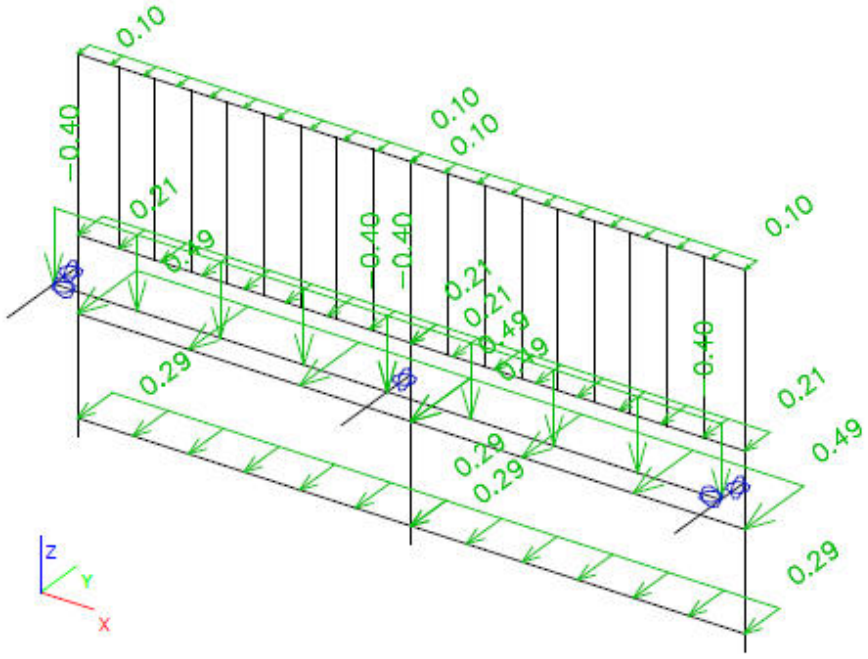

LETTENWEG 118, 4123 ALLSCHWIL, SWITZERLAND
TEL.: +41 (0)61 501 8210 / +41 (0)79 508 1651
REGISTERED IN SWITZERLAND | VAT REGISTRATION CHE-437.605.665

2.4. LC4 - T1: Thermal load - Summer

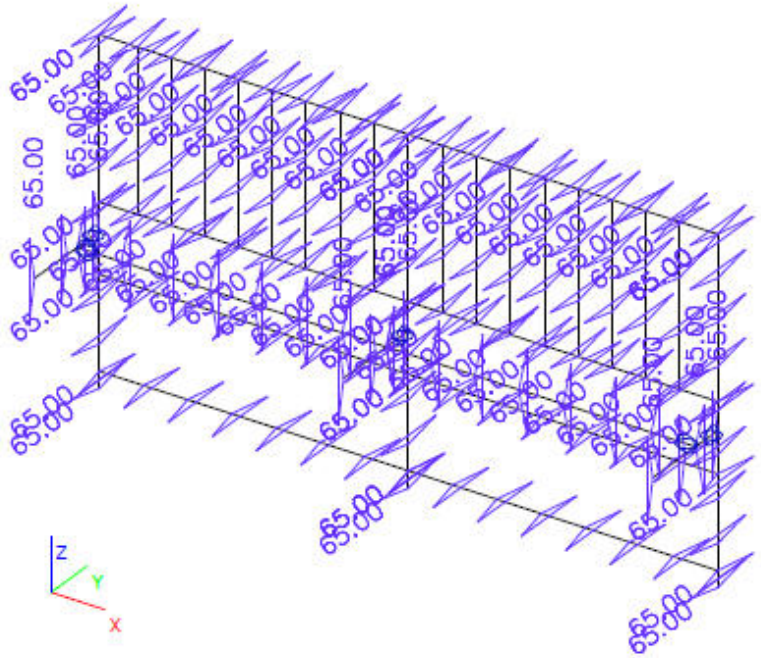

2.5. LC5 - T2: Thermal load - Winter

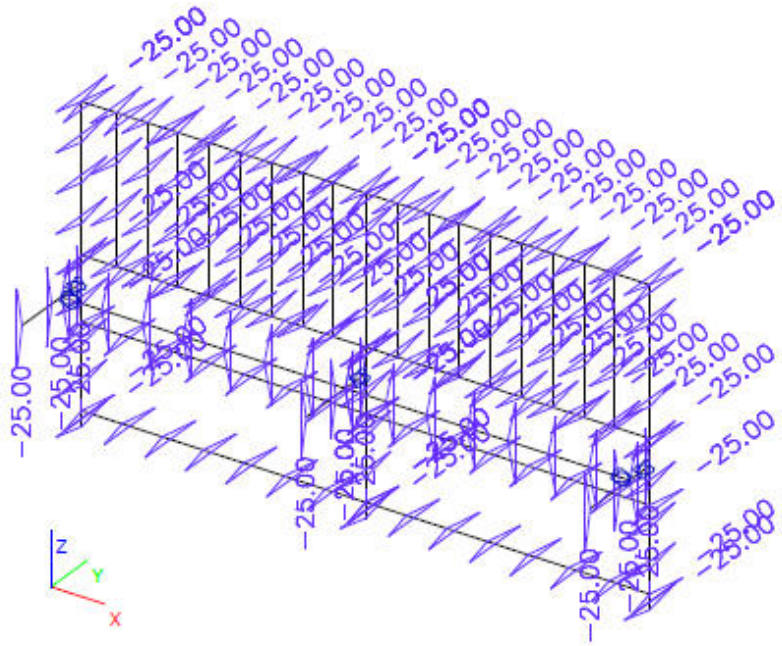

CASTLE
LETTENWEG 118, 4123 ALLSCHWIL, SWITZERLAND
TEL.: +41 (0)61 501 8210 / +41 (0)79 508 1651
REGISTERED IN SWITZERLAND | VAT REGISTRATION CHE-437.605.665

2.6. Nonlinear combinations

Name	Description	Type	Load cases	Coeff. [-]
NC101	(D) + (L)	Serviceability	LC0 - Selfweight	1.00
			LC1 - D - Dead load	1.00
			LC2 - L - Imposed/Live Load	1.00
NC102	(D) + (Wp)	Serviceability	LC0 - Selfweight	1.00
			LC1 - D - Dead load	1.00
			LC3 - W - Wind load Load	-1.00
NC103	(D) + (Ws)	Serviceability	LC0 - Selfweight	1.00
			LC1 - D - Dead load	1.00
			LC3 - W - Wind load Load	1.00
NC211	1.35(D) + 1.5(L) + 0.75(Wp) + 0.75(Ts)	Ultimate	LC0 - Selfweight	1.35
			LC1 - D - Dead load	1.35
			LC2 - L - Imposed/Live Load	1.50
			LC3 - W - Wind load Load	-0.75
			LC4 - T1 - Temperature Load, Summer	0.75
NC212	1.35(D) + 1.5(L) + 0.75(Ws) + 0.75(Ts)	Ultimate	LC0 - Selfweight	1.35
			LC1 - D - Dead load	1.35
			LC2 - L - Imposed/Live Load	1.50
			LC3 - W - Wind load Load	0.75
			LC4 - T1 - Temperature Load, Summer	0.75
NC213	1.35(D) + 1.5(Wp) + 0.9(Ts)	Ultimate	LC0 - Selfweight	1.35
			LC1 - D - Dead load	1.35
			LC3 - W - Wind load Load	-1.50
			LC4 - T1 - Temperature Load, Summer	0.90
NC214	1.35(D) + 1.5(Ws) + 0.9(Ts)	Ultimate	LC0 - Selfweight	1.35
			LC1 - D - Dead load	1.35
			LC3 - W - Wind load Load	1.50
			LC4 - T1 - Temperature Load, Summer	0.90
NC221	1.35(D) + 1.5(L) + 0.75(Wp) + 0.75(Tw)	Ultimate	LC0 - Selfweight	1.35
			LC1 - D - Dead load	1.35
			LC2 - L - Imposed/Live Load	1.50
			LC3 - W - Wind load Load	-0.75
			LC5 - T2 - Temperature Load, Winter	0.75
NC222	1.35(D) + 1.5(L) + 0.75(Ws) + 0.75(Tw)	Ultimate	LC0 - Selfweight	1.35
			LC1 - D - Dead load	1.35
			LC2 - L - Imposed/Live Load	1.50
			LC3 - W - Wind load Load	0.75
			LC5 - T2 - Temperature Load, Winter	0.75
NC223	1.35(D) + 1.5(Wp) + 0.9(Tw)	Ultimate	LC0 - Selfweight	1.35
			LC1 - D - Dead load	1.35
			LC3 - W - Wind load Load	-1.50
			LC5 - T2 - Temperature Load, Winter	0.90
NC224	1.35(D) + 1.5(Ws) + 0.9(Tw)	Ultimate	LC0 - Selfweight	1.35
			LC1 - D - Dead load	1.35
			LC3 - W - Wind load Load	1.50
			LC5 - T2 - Temperature Load, Winter	0.90
NC231	1.35(D) + 1.5(Ts)	Ultimate	LC0 - Selfweight	1.35
			LC1 - D - Dead load	1.35
			LC4 - T1 - Temperature Load, Summer	1.50
NC232	1.35(D) + 1.5(Tw)	Ultimate	LC0 - Selfweight	1.35
			LC1 - D - Dead load	1.35
			LC5 - T2 - Temperature Load, Winter	1.50

2.7. Result classes

Name	List
Serviceability	NC101
	NC102
	NC103
Ultimate	NC211
	NC212
	NC213
	NC214

NEMETSCHEK Scia	Project	The Corniche, London
	Part	BAL-102 Type Flat
	Description	Aluminium - Welded assembly
	National code	EC - EN

Name	List
Ultimate	NC221
	NC222
	NC223
	NC224
	NC231
	NC232

3. Calculation protocol

Calculation protocol

Nonlinear calculation

Number of 2D elements	0
Number of 1D elements	157
Number of mesh nodes	134
Number of equations	804
Maximum iterations	50
Number of increments	2
Type of nonlinearity	II. order
	local nonlinearities
Method (II. order)	Newton-Raphson
Bending theory	Mindlin

No. of combination	Start	End	No. of iterations
NC 1	26.05.2015 14:02	26.05.2015 14:02	4
NC 2	26.05.2015 14:02	26.05.2015 14:02	6
NC 3	26.05.2015 14:02	26.05.2015 14:02	4
NC 4	26.05.2015 14:02	26.05.2015 14:02	3
NC 5	26.05.2015 14:02	26.05.2015 14:02	6
NC 6	26.05.2015 14:02	26.05.2015 14:02	5
NC 7	26.05.2015 14:02	26.05.2015 14:02	5
NC 8	26.05.2015 14:02	26.05.2015 14:02	5
NC 9	26.05.2015 14:02	26.05.2015 14:02	5
NC 10	26.05.2015 14:02	26.05.2015 14:02	5
NC 11	26.05.2015 14:02	26.05.2015 14:02	5
NC 12	26.05.2015 14:02	26.05.2015 14:02	5
NC 13	26.05.2015 14:02	26.05.2015 14:02	5

Sum of loads and reactions.

	[kN]	X	Y	Z
Nonlinear combination 1	loads	0.0	-1.4	-1.6
	reactions in nodes	0.0	1.4	1.6
	reactions on lines	0.0	0.0	0.0
	contact 1D	0.0	0.0	0.0
	contact 2D	0.0	0.0	0.0
Nonlinear combination 2	loads	-0.0	-0.5	-1.8
	reactions in nodes	0.0	0.5	1.8
	reactions on lines	0.0	0.0	0.0
	contact 1D	0.0	0.0	0.0
	contact 2D	0.0	0.0	0.0
Nonlinear combination 3	loads	0.0	2.0	0.4
	reactions in nodes	-0.0	-2.0	-0.4
	reactions on lines	0.0	0.0	0.0
	contact 1D	0.0	0.0	0.0
	contact 2D	0.0	0.0	0.0
Nonlinear combination 4	loads	-0.0	-2.0	-1.1
	reactions in nodes	0.0	2.0	1.1
	reactions on lines	0.0	0.0	0.0
	contact 1D	0.0	0.0	0.0
	contact 2D	0.0	0.0	0.0
Nonlinear combination 5	loads	-0.0	-3.6	-2.9
	reactions in nodes	0.0	3.6	2.9
	reactions on lines	0.0	0.0	0.0
	contact 1D	0.0	0.0	0.0
	contact 2D	0.0	0.0	0.0
Nonlinear combination 6	loads	0.0	3.1	0.6
	reactions in nodes	-0.0	-3.1	-0.6
	reactions on lines	0.0	0.0	0.0
	contact 1D	0.0	0.0	0.0
	contact 2D	0.0	0.0	0.0
Nonlinear combination 7	loads	-0.0	-3.1	-1.6
	reactions in nodes	0.0	3.1	1.6
	reactions on lines	0.0	0.0	0.0
	contact 1D	0.0	0.0	0.0
	contact 2D	0.0	0.0	0.0
Nonlinear combination 8	loads	-0.0	-0.5	-1.8

CASTLE
LETTENWEG 118, 4123 ALLSCHWIL, SWITZERLAND
TEL.: +41 (0)61 501 8210 / +41 (0)79 508 1651
REGISTERED IN SWITZERLAND | VAT REGISTRATION CHE-437.605.665

NEMETSCHEK Scia	Project	The Corniche, London
	Part	BAL-102 Type Flat
	Description	Aluminium - Welded assembly
	National code	EC - EN

Calculation protocol

	[kN]	X	Y	Z
	reactions in nodes	0.0	0.5	1.8
	reactions on lines	0.0	0.0	0.0
	contact 1D	0.0	0.0	0.0
	contact 2D	0.0	0.0	0.0
Nonlinear combination 9	loads	-0.0	-3.6	-2.9
	reactions in nodes	0.0	3.6	2.9
	reactions on lines	0.0	0.0	0.0
	contact 1D	0.0	0.0	0.0
	contact 2D	0.0	0.0	0.0
Nonlinear combination 10	loads	0.0	3.1	0.6
	reactions in nodes	-0.0	-3.1	-0.6
	reactions on lines	0.0	0.0	0.0
	contact 1D	0.0	0.0	0.0
	contact 2D	0.0	0.0	0.0
Nonlinear combination 11	loads	-0.0	-3.1	-1.6
	reactions in nodes	0.0	3.1	1.6
	reactions on lines	0.0	0.0	0.0
	contact 1D	0.0	0.0	0.0
	contact 2D	0.0	0.0	0.0
Nonlinear combination 12	loads	0.0	0.0	-0.5
	reactions in nodes	0.0	-0.0	0.5
	reactions on lines	0.0	0.0	0.0
	contact 1D	0.0	0.0	0.0
	contact 2D	0.0	0.0	0.0
Nonlinear combination 13	loads	0.0	0.0	-0.5
	reactions in nodes	0.0	-0.0	0.5
	reactions on lines	0.0	0.0	0.0
	contact 1D	0.0	0.0	0.0
	contact 2D	0.0	0.0	0.0

4. Deflection

4.1. Deformations on member; uz: NC101

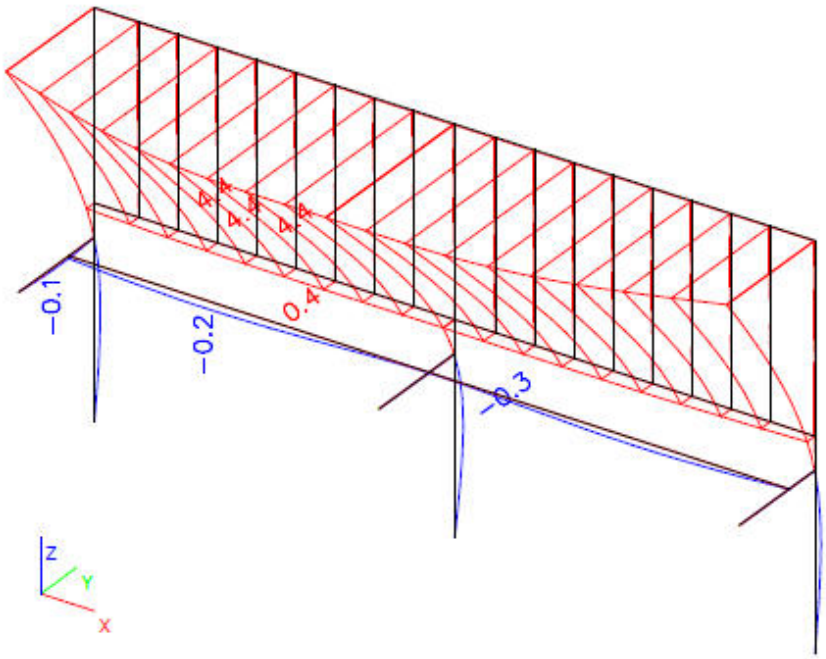

LETTENWEG 118, 4123 ALLSCHWIL, SWITZERLAND
TEL.: +41 (0)61 501 8210 / +41 (0)79 508 1651
REGISTERED IN SWITZERLAND | VAT REGISTRATION CHE-437.605.665

NEMETSCHEK Scia	Project	The Corniche, London
	Part	BAL-102 Type Flat
	Description	Aluminium - Welded assembly
	National code	EC - EN

5. Member code check

5.1. Stress; von Mises: Vertical members

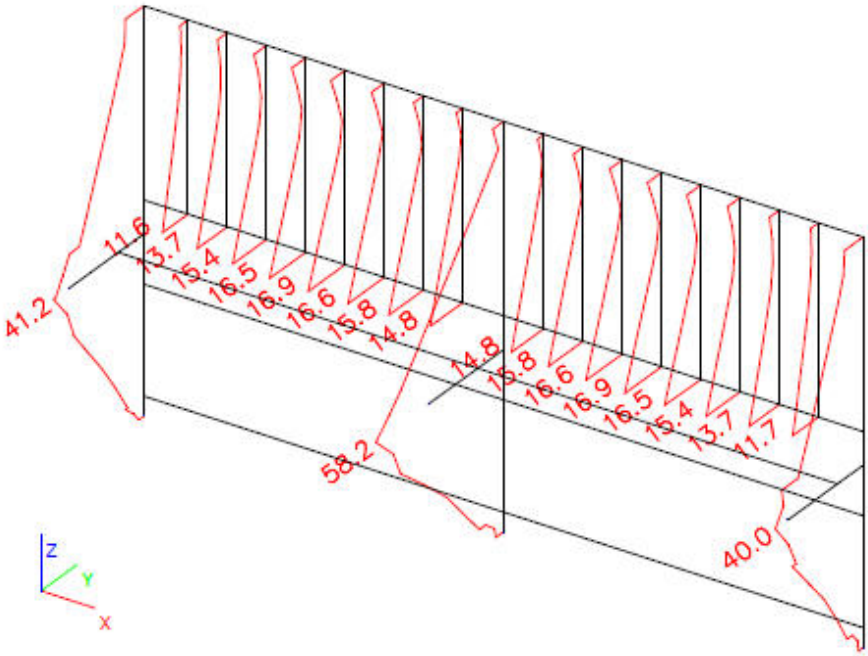

Nonlinear calculation, Extreme : Global
Selection : All
Nonlinear combinations : NC211
Cross-section : M1 - Rectangle (50; 20)
Values : Normal -, Normal +, Shear, von Mises, Fatigue, Kappa, Sigma Y

Member	Case	dx [m]	Normal - [MPa]	Normal + [MPa]	Shear [MPa]	von Mises [MPa]	Fatigue [MPa]	Kappa [-]
B120	NC211	0.455	**-58.2**		0.0	**58.2**		
B120	NC211	0.455	**58.0**	58.0			0.0	1.00
B120	NC211	1.025	-4.3	**-4.3**			0.0	1.00
B120	NC211	0.455		**58.0**	0.0	58.0		
B99	NC211	0.000	-1.1	-1.1	**0.0**	1.1		
B99	NC211	0.782		0.0	**4.9**	8.4		
B99	NC211	0.000	-1.1	-1.1			0.0	**1.00**

Nonlinear calculation, Extreme : Global
Selection : All
Nonlinear combinations : NC211
Cross-section : M2 - Circle (15)
Values : Normal -, Normal +, Shear, von Mises, Fatigue, Kappa, Sigma Y

Member	Case	dx [m]	Normal - [MPa]	Normal + [MPa]	Shear [MPa]	von Mises [MPa]	Fatigue [MPa]	Kappa [-]
B114	NC211	0.000	**-16.8**		0.6	**16.9**		
B107	NC211	0.000	**16.8**	16.8			0.0	1.00
B114	NC211	0.485	-6.3	**-6.3**			0.0	1.00
B107	NC211	0.000		**16.8**	0.6	16.8		
B103	NC211	0.000	11.2	11.2			0.0	**1.00**
B103	NC211	0.061		4.7	**1.8**	5.6		
B103	NC211	0.000	11.2	11.2	1.7	11.5		

CASTLE
LETTENWEG 118, 4123 ALLSCHWIL, SWITZERLAND
TEL.: +41 (0)61 501 8210 / +41 (0)79 508 1651
REGISTERED IN SWITZERLAND | VAT REGISTRATION CHE-437.605.665

NEMETSCHEK Scia	Project	The Corniche, London
	Part	BAL-102 Type Flat
	Description	Aluminium - Welded assembly
	National code	EC - EN

5.2. Stress; von Mises: Horizontal members

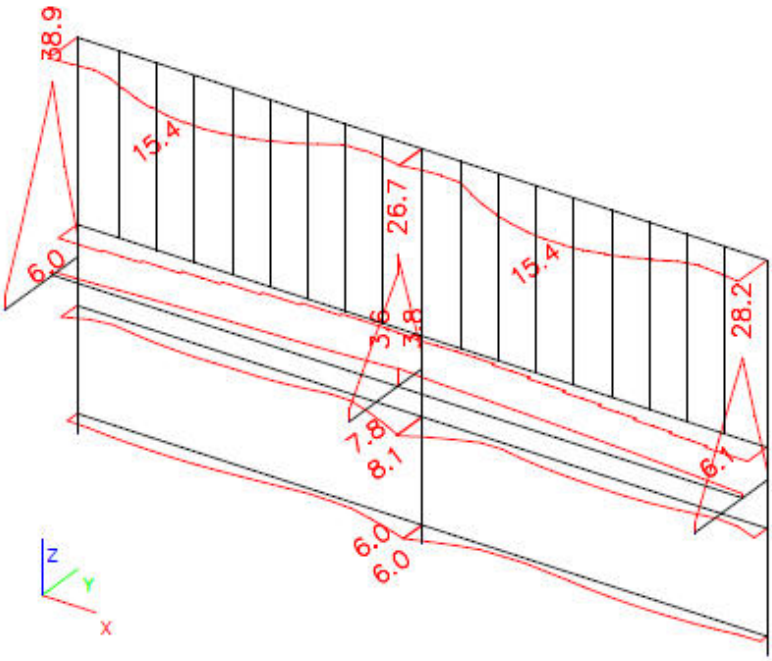

Nonlinear calculation, Extreme : Global
Selection : All
Nonlinear combinations : NC211
Cross-section : T1 - Tube (50; 3)
Values : Normal -, Normal +, Shear, von Mises, Fatigue, Kappa, Sigma Y

Member	Case	dx [m]	Normal - [MPa]	Normal + [MPa]	Shear [MPa]	von Mises [MPa]	Fatigue [MPa]	Kappa [-]
B132	NC211	0.464	**-14.6**		2.7	15.3		
B130	NC211	0.474	**14.6**	14.6			0.0	1.00
B132	NC211	0.000	-6.3	**-6.3**			0.0	1.00
B130	NC211	0.474		**14.6**	2.7	15.3		
B130	NC211	0.000	-4.4	-4.4			0.0	**1.00**
B130	NC211	0.000	-0.9		**5.2**	9.1		
B132	NC211	0.515	-14.6		2.9	**15.4**		
B130	NC211	0.000	-4.4	-4.4	3.3	7.2		

Nonlinear calculation, Extreme : Global
Selection : All
Nonlinear combinations : NC211
Cross-section : T2 - O (50; 3; 50; 3)
Values : Normal -, Normal +, Shear, von Mises, Fatigue, Kappa, Sigma Y

Member	Case	dx [m]	Normal - [MPa]	Normal + [MPa]	Shear [MPa]	von Mises [MPa]	Fatigue [MPa]	Kappa [-]
B129	NC211	0.939	**-1.6**		0.0	1.6		
B129	NC211	0.000	**0.4**	0.4			0.0	1.00
B129	NC211	0.939	-1.6	**-1.6**			0.0	1.00
B129	NC211	0.939		**2.5**	0.0	2.5		
B97	NC211	0.000	-0.7	-0.7			0.0	**1.00**
B97	NC211	0.000		0.3	**3.4**	6.0		
B129	NC211	0.939		1.5	3.4	**6.1**		
B97	NC211	0.000	-0.7	-0.7	0.0	0.7		

Nonlinear calculation, Extreme : Global
Selection : All
Nonlinear combinations : NC211
Cross-section : T3 - O (70; 3; 30; 3)
Values : Normal -, Normal +, Shear, von Mises, Fatigue, Kappa, Sigma Y

CASTLE
LETTENWEG 118, 4123 ALLSCHWIL, SWITZERLAND
TEL.: +41 (0)61 501 8210 / +41 (0)79 508 1651
REGISTERED IN SWITZERLAND | VAT REGISTRATION CHE-437.605.665

NEMETSCHEK Scia	Project	The Corniche, London
	Part	BAL-102 Type Flat
	Description	Aluminium - Welded assembly
	National code	EC - EN

Member	Case	dx [m]	Normal - [MPa]	Normal + [MPa]	Shear [MPa]	von Mises [MPa]	Fatigue [MPa]	Kappa [-]
B128	NC211	0.000	**-3.8**		0.0	**3.8**		
B98	NC211	0.939	**2.5**	2.5			0.0	1.00
B128	NC211	0.000	-3.4	**-3.4**			0.0	1.00
B98	NC211	0.939		**2.5**	0.0	2.5		
B98	NC211	0.000	-0.6	-0.6			0.0	**1.00**
B98	NC211	0.000	-0.6		**0.3**	0.7		
B98	NC211	0.000	-0.6	-0.6	0.0	0.6		

Nonlinear calculation, Extreme : Global
Selection : All
Nonlinear combinations : NC211
Cross-section : T4 - Rectangle (50; 12)
Values : Normal -, Normal +, Shear, von Mises, Fatigue, Kappa, Sigma Y

Member	Case	dx [m]	Normal - [MPa]	Normal + [MPa]	Shear [MPa]	von Mises [MPa]	Fatigue [MPa]	Kappa [-]
B100	NC211	0.100	**-38.9**		0.0	**38.9**		
B102	NC211	0.100	**24.8**	24.8			0.0	1.00
B101	NC211	0.100	-26.7	**-26.7**			0.0	1.00
B100	NC211	0.100		**35.7**	0.0	35.7		
B100	NC211	0.000	-1.6	-1.6			0.0	**1.00**
B100	NC211	0.000	-1.6		**2.7**	4.9		
B100	NC211	0.000	-1.6	-1.6	0.0	1.6		

6. Factored reaction forces

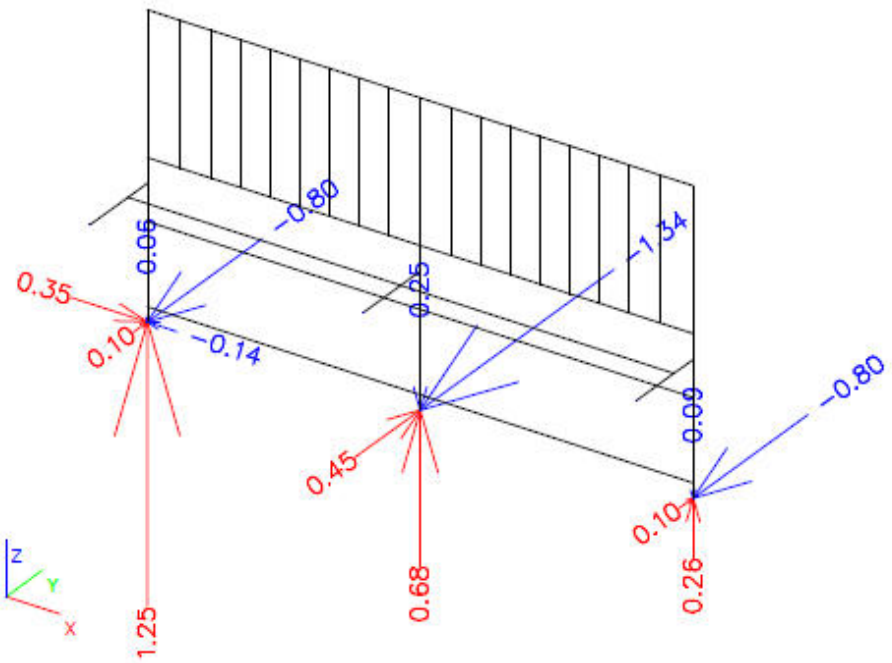

Nonlinear calculation, Extreme : Global
Selection : Named selection - Support - base
Class : Ultimate
Rotated supports

Support	Case	Rx [kN]	Ry [kN]	Rz [kN]	Mx [kNcm]	My [kNcm]	Mz [kNcm]
Sn1/N192	NC232	**-0.14**	0.00	0.07	0.00	0.00	0.00
Sn1/N192	NC231	**0.35**	0.00	0.19	0.00	0.00	0.00
Sn2/N234	NC211	0.00	**-1.34**	0.13	0.00	0.00	0.00
Sn2/N234	NC214	0.00	**0.45**	0.68	0.00	0.00	0.00

CASTLE
LETTENWEG 118, 4123 ALLSCHWIL, SWITZERLAND
TEL.: +41 (0)61 501 8210 / +41 (0)79 508 1651
REGISTERED IN SWITZERLAND | VAT REGISTRATION CHE-437.605.665

NEMETSCHEK Scia	Project	The Corniche, London
	Part	BAL-102 Type Flat
	Description	Aluminium - Welded assembly
	National code	EC - EN

Support	Case	Rx [kN]	Ry [kN]	Rz [kN]	Mx [kNcm]	My [kNcm]	Mz [kNcm]
Sn2/N234	NC223	0.00	-0.45	**-0.25**	0.00	0.00	0.00
Sn1/N192	NC212	0.16	-0.70	**1.25**	0.00	0.00	0.00
Sn1/N192	NC211	0.17	-0.80	1.11	**0.00**	**0.00**	**0.00**

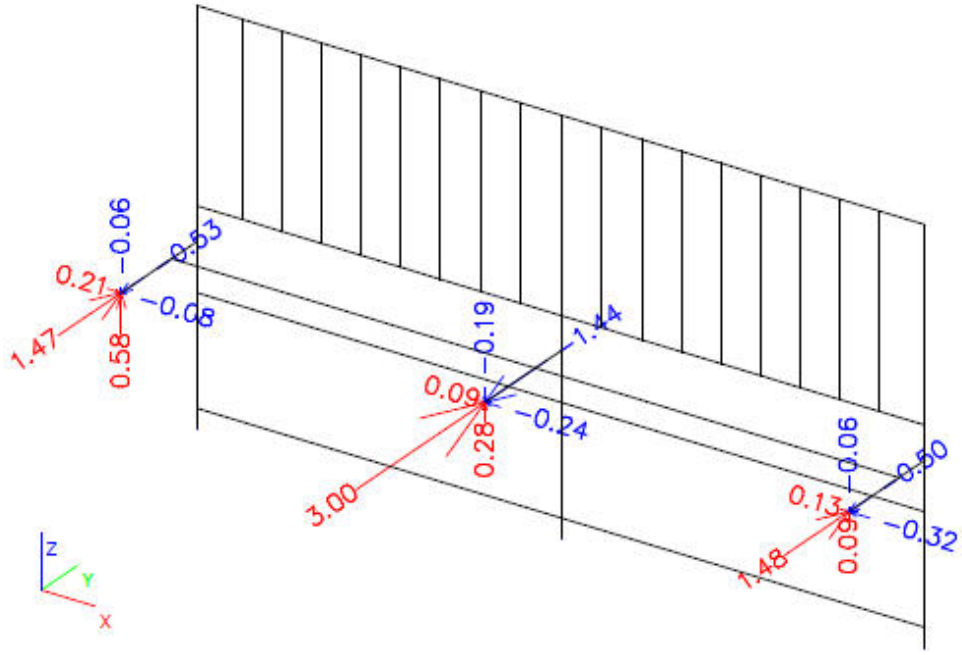

Nonlinear calculation, Extreme : Global
Selection : Named selection - Support - strut
Class : Ultimate
Rotated supports

Support	Case	Rx [kN]	Ry [kN]	Rz [kN]	Mx [kNcm]	My [kNcm]	Mz [kNcm]
Sn15/N199	NC231	**-0.32**	0.05	0.02	0.00	0.00	0.00
Sn13/N195	NC231	**0.21**	-0.06	0.02	0.00	0.00	0.00
Sn14/N197	NC213	-0.15	**-1.44**	**-0.19**	0.00	0.00	0.00
Sn14/N197	NC212	-0.11	**3.00**	0.24	0.00	0.00	0.00
Sn13/N195	NC212	0.10	1.43	**0.58**	0.00	0.00	0.00
Sn13/N195	NC211	0.10	0.94	0.50	**0.00**	**0.00**	**0.00**

CASTLE
LETTENWEG 118, 4123 ALLSCHWIL, SWITZERLAND
TEL.: +41 (0)61 501 8210 / +41 (0)79 508 1651
REGISTERED IN SWITZERLAND | VAT REGISTRATION CHE-437.605.665

2.4 Type J Balustrade

Refer to structural analysis results in section 2.4.3.

2.4.1 Deflection check

δ_{max}	=	3.9	mm	
δ_{allow} = min{1100/65; 15}	=	15.0	mm	**0.26** < 1.0

2.4.2 Stress check to BS EN 1999-1-1

i Vertical members

Max. Von mises stress, σ_{max}	=	58.9	N/mm^2	

EN AW-6082 T6

$\sigma_{HAZ,Rd}$ = 0.5·250/1.1	=	125.0	N/mm^2	**0.47** < 1.0

ii Horizontal members

Max. Von mises stress, σ_{max}	=	65.4	N/mm^2	
Max. HAZ stress, σ_{HAZ}	=	18.7	N/mm^2	

EN AW-6060 T6

$\sigma_{el,Rd}$ = 140/1.1	=	127.27	N/mm^2	**0.51** < 1.0
$\sigma_{HAZ,Rd}$ = 0.43·140/1.1	=	54.73	N/mm^2	**0.34** < 1.0

2.4.3 Structural analysis – Type J balustrade

NEMETSCHEK Scia	Project	The Corniche, London
	Part	BAL-102 Type J
	Description	Aluminium - Welded assembly
	National code	EC - EN

1. Structural model

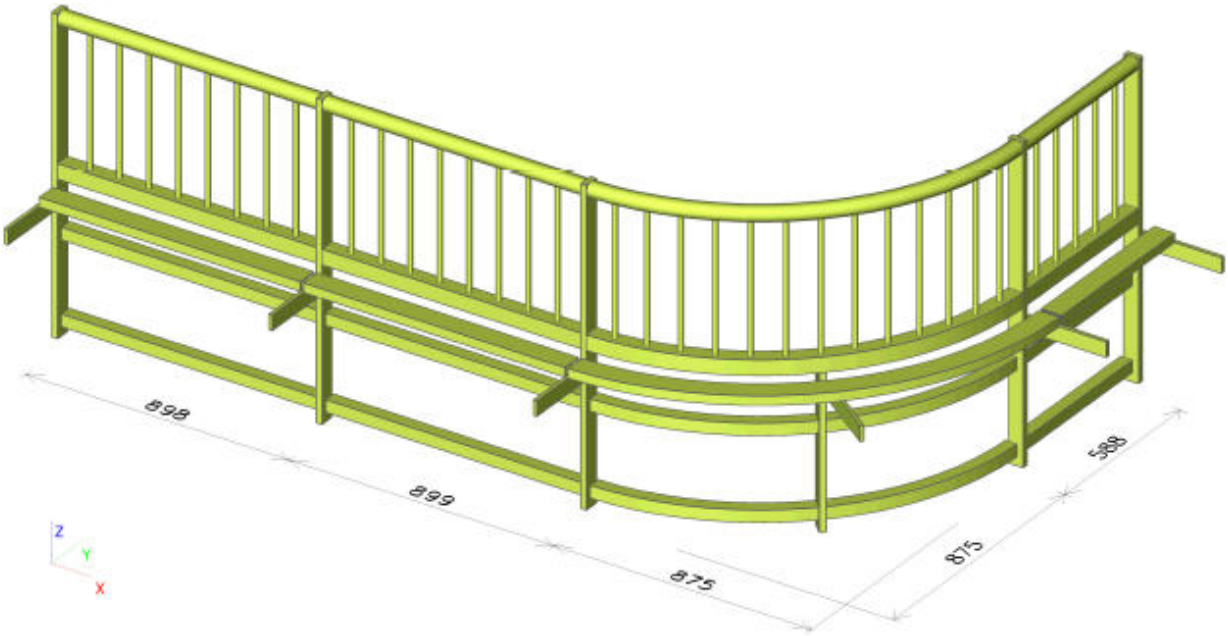

1.1. Parameters

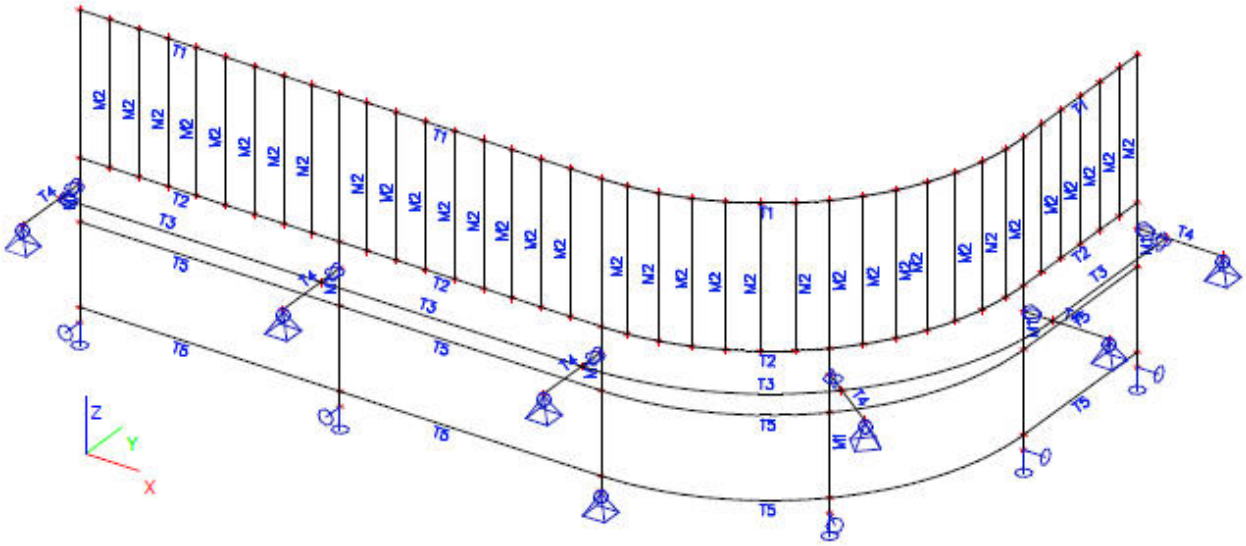

1.2. Materials

Name	Type	Unit mass [kg/m³]	E mod [MPa]	Poisson - nu	G mod [MPa]	Thermal exp [m/mK]
EN-AW 6060 T6	Aluminium	2700.00	7.0000e+04	0.3	2.6923e+04	0.00
EN-AW 6082 T6	Aluminium	2700.00	7.0000e+04	0.3	2.6923e+04	0.00

CASTLE
LETTENWEG 118, 4123 ALLSCHWIL, SWITZERLAND
TEL.: +41 (0)61 501 8210 / +41 (0)79 508 1651
REGISTERED IN SWITZERLAND | VAT REGISTRATION CHE-437.605.665

NEMETSCHEK Scia	Project	The Corniche, London
	Part	BAL-102 Type J
	Description	Aluminium - Welded assembly
	National code	EC - EN

1.3. Cross-sections

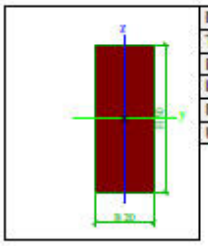

Name	M1	A [cm²]	10.00	
Type	Rectangle	A y, z [cm²]	8.33	8.33
Detailed	50; 20	I y, z [cm⁴]	20.83	3.33
Item material	EN-AW 6082 T6	I w [cm⁶], t [cm⁴]	3.59	9.95
Fabrication	general	Wel y, z [cm³]	8.33	3.33
Use 2D FEM analysis	✓	Wpl y, z [cm³]	12.50	5.00
		d y, z [mm]	0	0
		c YUCS, ZUCS [mm]	10	25
		α [deg]	0.00	

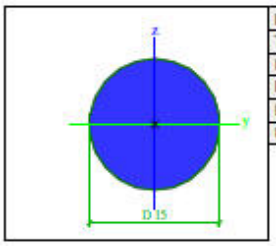

Name	M2	A [cm²]	1.77	
Type	Circle	A y, z [cm²]	1.59	1.59
Detailed	15	I y, z [cm⁴]	0.25	0.25
Item material	EN-AW 6082 T6	I w [cm⁶], t [cm⁴]	0.00	0.50
Fabrication	general	Wel y, z [cm³]	0.33	0.33
Use 2D FEM analysis	✓	Wpl y, z [cm³]	0.56	0.56
		d y, z [mm]	0	0
		c YUCS, ZUCS [mm]	7	8
		α [deg]	0.00	

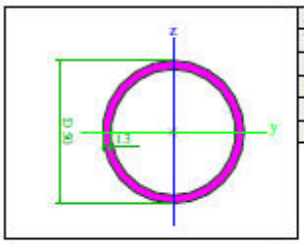

Name	T1	A [cm²]	4.43	
Type	Tube	A y, z [cm²]	2.97	2.97
Detailed	50; 3	I y, z [cm⁴]	12.28	12.28
Item material	EN-AW 6060 T6	I w [cm⁶], t [cm⁴]	0.00	23.96
Fabrication	extrusion	Wel y, z [cm³]	4.91	4.91
Use 2D FEM analysis	✓	Wpl y, z [cm³]	6.64	6.64
		d y, z [mm]	0	0
		c YUCS, ZUCS [mm]	25	25
		α [deg]	0.00	

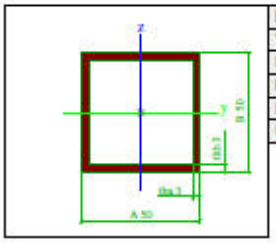

Name	T2	A [cm²]	5.64	
Type	O	A y, z [cm²]	2.90	2.90
Detailed	50; 3; 50; 3	I y, z [cm⁴]	20.85	20.85
Item material	EN-AW 6060 T6	I w [cm⁶], t [cm⁴]	0.09	30.69
Fabrication	extrusion	Wel y, z [cm³]	8.34	8.34
Use 2D FEM analysis	✓	Wpl y, z [cm³]	9.95	9.95
		d y, z [mm]	0	0
		c YUCS, ZUCS [mm]	25	25
		α [deg]	0.00	

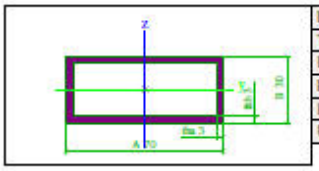

Name	T3	A [cm²]	5.64	
Type	O	A y, z [cm²]	3.92	1.78
Detailed	70; 3; 30; 3	I y, z [cm⁴]	8.38	33.32
Item material	EN-AW 6060 T6	I w [cm⁶], t [cm⁴]	7.98	20.67
Fabrication	extrusion	Wel y, z [cm³]	5.58	9.52
Use 2D FEM analysis	✓	Wpl y, z [cm³]	6.53	12.17
		d y, z [mm]	0	0
		c YUCS, ZUCS [mm]	35	15
		α [deg]	0.00	

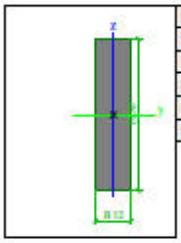

Name	T4	A [cm²]	6.00	
Type	Rectangle	A y, z [cm²]	5.00	5.00
Detailed	50; 12	I y, z [cm⁴]	12.50	0.72
Item material	EN-AW 6060 T6	I w [cm⁶], t [cm⁴]	1.16	2.44
Fabrication	general	Wel y, z [cm³]	5.00	1.20
Use 2D FEM analysis	✓	Wpl y, z [cm³]	7.50	1.80
		d y, z [mm]	0	0
		c YUCS, ZUCS [mm]	6	25
		α [deg]	0.00	

CASTLE
LETTENWEG 118, 4123 ALLSCHWIL, SWITZERLAND
TEL.: +41 (0)61 501 8210 / +41 (0)79 508 1651
REGISTERED IN SWITZERLAND | VAT REGISTRATION CHE-437.605.665

NEMETSCHEK Scia	Project	The Corniche, London
	Part	BAL-102 Type J
	Description	Aluminium - Welded assembly
	National code	EC - EN

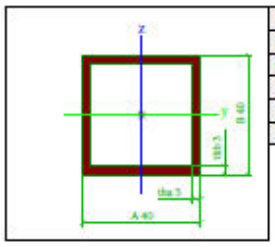

Name	T5	A [cm²]	4.44	
Type	O	A y, z [cm²]	2.31	2.31
Detailed	40; 3; 40; 3	I y, z [cm⁴]	10.20	10.20
Item material	EN-AW 6060 T6	I w [cm⁶], t [cm⁴]	0.04	15.12
Fabrication	extrusion	Wel y, z [cm³]	5.10	5.10
Use 2D FEM analysis	✓	Wpl y, z [cm³]	6.17	6.17
		d y, z [mm]	0	0
		c YUCS, ZUCS [mm]	20	20
		α [deg]	0.00	

Name	Mass [kg]	Surface [m²]	Volume [cm³]
Total results :	51.23	5.119	18974.20

Material	Mass [kg]	Surface [m²]	Unit volume mass [kg/m³]	Volume [cm³]
EN-AW 6060 T6	28.07	3.549	2700.00	10395.77
EN-AW 6082 T6	23.16	1.570	2700.00	8578.43

2. Loads [kN, kN/m]

2.1. LC1 - D: Dead load

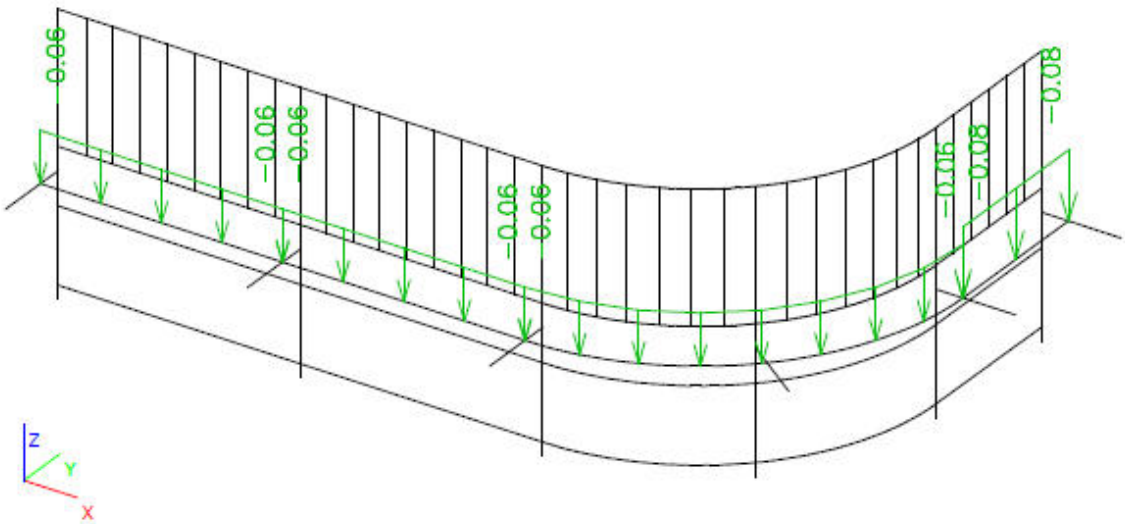

CASTLE
LETTENWEG 118, 4123 ALLSCHWIL, SWITZERLAND
TEL.: +41 (0)61 501 8210 / +41 (0)79 508 1651
REGISTERED IN SWITZERLAND | VAT REGISTRATION CHE-437.605.665

NEMETSCHEK Scia	Project	The Corniche, London
	Part	BAL-102 Type J
	Description	Aluminium - Welded assembly
	National code	EC - EN

2.2. LC2 - I: Imposed load

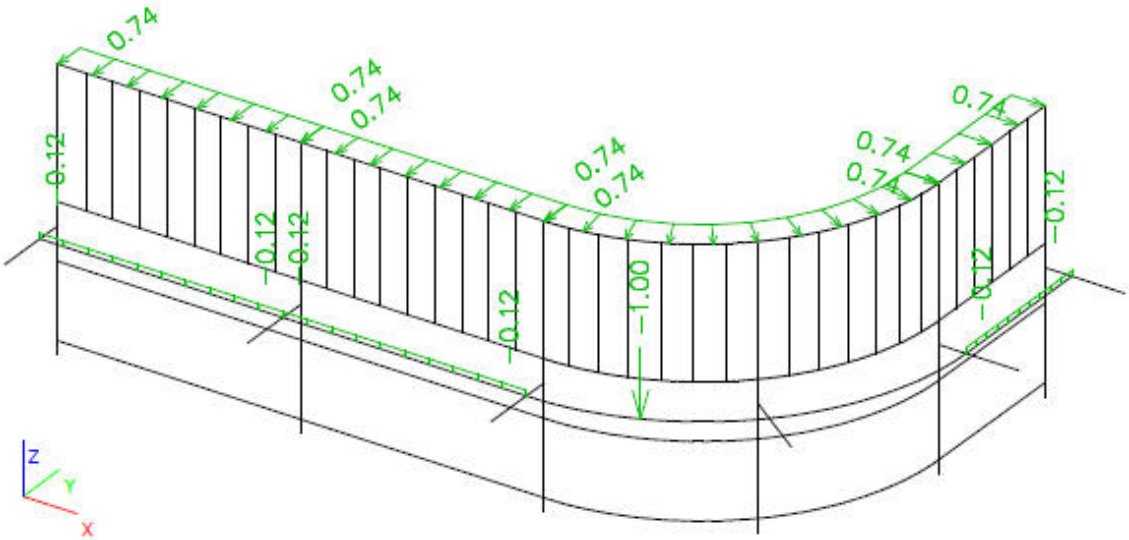

2.3. LC3 - W: Wind load

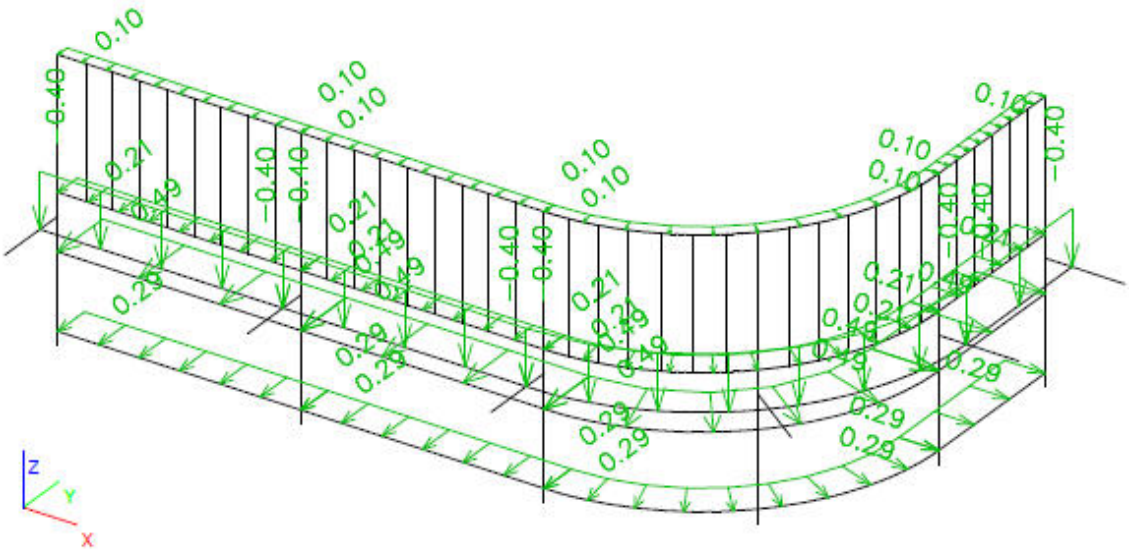

LETTENWEG 118, 4123 ALLSCHWIL, SWITZERLAND
TEL.: +41 (0)61 501 8210 / +41 (0)79 508 1651
REGISTERED IN SWITZERLAND | VAT REGISTRATION CHE-437.605.665

NEMETSCHEK Scia	Project	The Corniche, London
	Part	BAL-102 Type J
	Description	Aluminium - Welded assembly
	National code	EC - EN

2.4. LC4 - T1: Thermal load - Summer

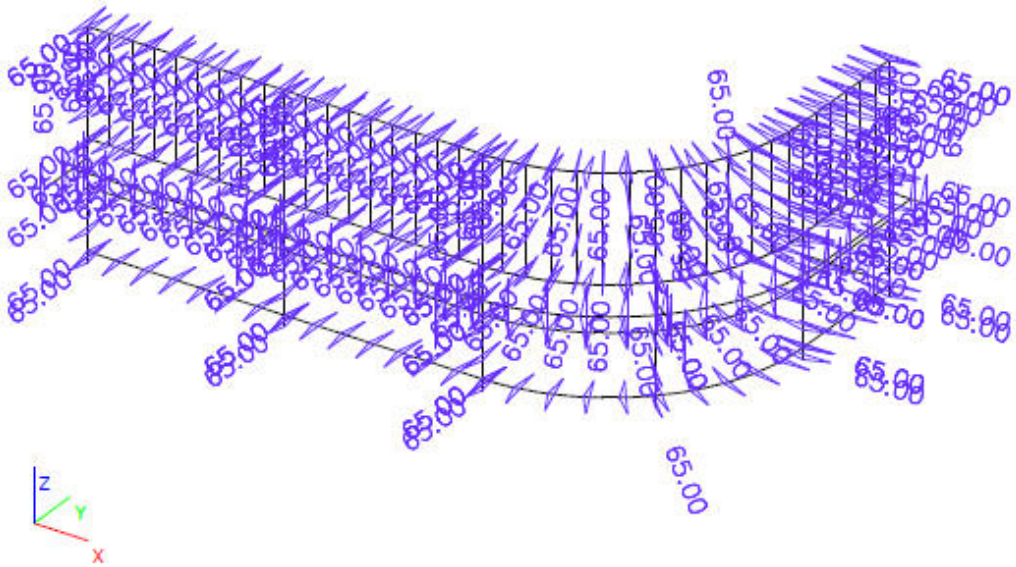

2.5. LC5 - T2: Thermal load - Winter

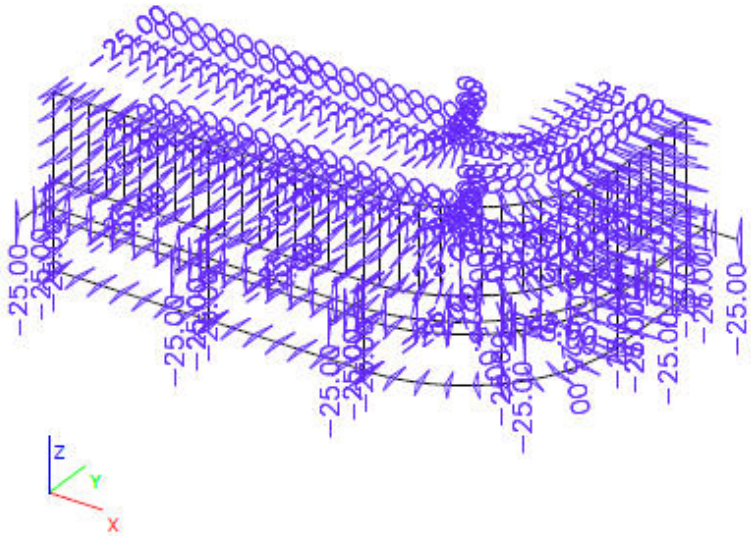

LETTENWEG 118, 4123 ALLSCHWIL, SWITZERLAND
TEL.: +41 (0)61 501 8210 / +41 (0)79 508 1651
REGISTERED IN SWITZERLAND | VAT REGISTRATION CHE-437.605.665

NEMETSCHEK Scia		
	Project	The Corniche, London
	Part	BAL-102 Type J
	Description	Aluminium - Welded assembly
	National code	EC - EN

2.6. Nonlinear combinations

Name	Description	Type	Load cases	Coeff. [-]
NC101	(D) + (L)	Serviceability	LC0 - Selfweight	1.00
			LC1 - D - Dead load	1.00
			LC2 - L - Imposed/Live Load	1.00
NC102	(D) + (Wp)	Serviceability	LC0 - Selfweight	1.00
			LC1 - D - Dead load	1.00
			LC3 - W - Wind load Load	-1.00
NC103	(D) + (Ws)	Serviceability	LC0 - Selfweight	1.00
			LC1 - D - Dead load	1.00
			LC3 - W - Wind load Load	1.00
NC211	1.35(D) + 1.5(L) + 0.75(Wp) + 0.75(Ts)	Ultimate	LC0 - Selfweight	1.35
			LC1 - D - Dead load	1.35
			LC2 - L - Imposed/Live Load	1.50
			LC3 - W - Wind load Load	-0.75
			LC4 - T1 - Temperature Load, Summer	0.75
NC212	1.35(D) + 1.5(L) + 0.75(Ws) + 0.75(Ts)	Ultimate	LC0 - Selfweight	1.35
			LC1 - D - Dead load	1.35
			LC2 - L - Imposed/Live Load	1.50
			LC3 - W - Wind load Load	0.75
			LC4 - T1 - Temperature Load, Summer	0.75
NC213	1.35(D) + 1.5(Wp) + 0.9(Ts)	Ultimate	LC0 - Selfweight	1.35
			LC1 - D - Dead load	1.35
			LC3 - W - Wind load Load	-1.50
			LC4 - T1 - Temperature Load, Summer	0.90
NC214	1.35(D) + 1.5(Ws) + 0.9(Ts)	Ultimate	LC0 - Selfweight	1.35
			LC1 - D - Dead load	1.35
			LC3 - W - Wind load Load	1.50
			LC4 - T1 - Temperature Load, Summer	0.90
NC221	1.35(D) + 1.5(L) + 0.75(Wp) + 0.75(Tw)	Ultimate	LC0 - Selfweight	1.35
			LC1 - D - Dead load	1.35
			LC2 - L - Imposed/Live Load	1.50
			LC3 - W - Wind load Load	-0.75
			LC5 - T2 - Temperature Load, Winter	0.75
NC222	1.35(D) + 1.5(L) + 0.75(Ws) + 0.75(Tw)	Ultimate	LC0 - Selfweight	1.35
			LC1 - D - Dead load	1.35
			LC2 - L - Imposed/Live Load	1.50
			LC3 - W - Wind load Load	0.75
			LC5 - T2 - Temperature Load, Winter	0.75
NC223	1.35(D) + 1.5(Wp) + 0.9(Tw)	Ultimate	LC0 - Selfweight	1.35
			LC1 - D - Dead load	1.35
			LC3 - W - Wind load Load	-1.50
			LC5 - T2 - Temperature Load, Winter	0.90
NC224	1.35(D) + 1.5(Ws) + 0.9(Tw)	Ultimate	LC0 - Selfweight	1.35
			LC1 - D - Dead load	1.35
			LC3 - W - Wind load Load	1.50
			LC5 - T2 - Temperature Load, Winter	0.90
NC231	1.35(D) + 1.5(Ts)	Ultimate	LC0 - Selfweight	1.35
			LC1 - D - Dead load	1.35
			LC4 - T1 - Temperature Load, Summer	1.50
NC232	1.35(D) + 1.5(Tw)	Ultimate	LC0 - Selfweight	1.35
			LC1 - D - Dead load	1.35
			LC5 - T2 - Temperature Load, Winter	1.50

2.7. Result classes

Name	List
Serviceability	NC101
	NC102
	NC103
Ultimate	NC211
	NC212
	NC213
	NC214

CASTLE
LETTENWEG 118, 4123 ALLSCHWIL, SWITZERLAND
TEL.: +41 (0)61 501 8210 / +41 (0)79 508 1651
REGISTERED IN SWITZERLAND | VAT REGISTRATION CHE-437.605.665

NEMETSCHEK Scia	Project	The Corniche, London
	Part	BAL-102 Type J
	Description	Aluminium - Welded assembly
	National code	EC - EN

Name	List
Ultimate	NC221
	NC222
	NC223
	NC224
	NC231
	NC232

3. Calculation protocol

Calculation protocol

Nonlinear calculation

Number of 2D elements	0
Number of 1D elements	542
Number of mesh nodes	490
Number of equations	2940
Maximum iterations	50
Number of increments	2
Type of nonlinearity	II. order
	local nonlinearities
Method (II. order)	Newton-Raphson
Bending theory	Mindlin

No. of combination	Start	End	No. of iterations
NC 1	26.05.2015 14:24	26.05.2015 14:24	4
NC 2	26.05.2015 14:24	26.05.2015 14:24	5
NC 3	26.05.2015 14:24	26.05.2015 14:24	4
NC 4	26.05.2015 14:24	26.05.2015 14:24	4
NC 5	26.05.2015 14:24	26.05.2015 14:24	5
NC 6	26.05.2015 14:24	26.05.2015 14:24	5
NC 7	26.05.2015 14:24	26.05.2015 14:24	5
NC 8	26.05.2015 14:24	26.05.2015 14:24	5
NC 9	26.05.2015 14:24	26.05.2015 14:24	5
NC 10	26.05.2015 14:24	26.05.2015 14:24	5
NC 11	26.05.2015 14:24	26.05.2015 14:24	5
NC 12	26.05.2015 14:24	26.05.2015 14:24	5
NC 13	26.05.2015 14:24	26.05.2015 14:24	5

Sum of loads and reactions.

	[kN]	X	Y	Z
Nonlinear combination 1	loads	1.1	-2.0	-2.0
	reactions in nodes	-1.1	2.0	2.0
	reactions on lines	0.0	0.0	0.0
	contact 1D	0.0	0.0	0.0
	contact 2D	0.0	0.0	0.0
Nonlinear combination 2	loads	0.4	-0.8	-1.8
	reactions in nodes	-0.4	0.8	1.8
	reactions on lines	0.0	0.0	0.0
	contact 1D	0.0	0.0	0.0
	contact 2D	0.0	0.0	0.0
Nonlinear combination 3	loads	-1.6	2.9	0.8
	reactions in nodes	1.6	-2.9	-0.8
	reactions on lines	0.0	0.0	0.0
	contact 1D	0.0	0.0	0.0
	contact 2D	0.0	0.0	0.0
Nonlinear combination 4	loads	1.6	-2.9	-2.3
	reactions in nodes	-1.6	2.9	2.3
	reactions on lines	0.0	0.0	0.0
	contact 1D	0.0	0.0	0.0
	contact 2D	0.0	0.0	0.0
Nonlinear combination 5	loads	2.8	-5.2	-4.2
	reactions in nodes	-2.8	5.2	4.2
	reactions on lines	0.0	0.0	0.0
	contact 1D	0.0	0.0	0.0
	contact 2D	0.0	0.0	0.0
Nonlinear combination 6	loads	-2.4	4.4	1.3
	reactions in nodes	2.4	-4.4	-1.3
	reactions on lines	0.0	0.0	0.0
	contact 1D	0.0	0.0	0.0
	contact 2D	0.0	0.0	0.0
Nonlinear combination 7	loads	2.4	-4.4	-3.4
	reactions in nodes	-2.4	4.4	3.4
	reactions on lines	0.0	0.0	0.0
	contact 1D	0.0	0.0	0.0
	contact 2D	0.0	0.0	0.0
Nonlinear combination 8	loads	0.4	-0.8	-1.8

CASTLE
LETTENWEG 118, 4123 ALLSCHWIL, SWITZERLAND
TEL.: +41 (0)61 501 8210 / +41 (0)79 508 1651
REGISTERED IN SWITZERLAND | VAT REGISTRATION CHE-437.605.665

NEMETSCHEK Scia	Project	The Corniche, London
	Part	BAL-102 Type J
	Description	Aluminium - Welded assembly
	National code	EC - EN

Calculation protocol

	[kN]	X	Y	Z
	reactions in nodes	-0.4	0.8	1.8
	reactions on lines	0.0	0.0	0.0
	contact 1D	0.0	0.0	0.0
	contact 2D	0.0	0.0	0.0
Nonlinear combination 9	loads	2.8	-5.2	-4.2
	reactions in nodes	-2.8	5.2	4.2
	reactions on lines	0.0	0.0	0.0
	contact 1D	0.0	0.0	0.0
	contact 2D	0.0	0.0	0.0
Nonlinear combination 10	loads	-2.4	4.4	1.3
	reactions in nodes	2.4	-4.4	-1.3
	reactions on lines	0.0	0.0	0.0
	contact 1D	0.0	0.0	0.0
	contact 2D	0.0	0.0	0.0
Nonlinear combination 11	loads	2.4	-4.4	-3.4
	reactions in nodes	-2.4	4.4	3.4
	reactions on lines	0.0	0.0	0.0
	contact 1D	0.0	0.0	0.0
	contact 2D	0.0	0.0	0.0
Nonlinear combination 12	loads	0.0	0.0	-1.0
	reactions in nodes	-0.0	0.0	1.0
	reactions on lines	0.0	0.0	0.0
	contact 1D	0.0	0.0	0.0
	contact 2D	0.0	0.0	0.0
Nonlinear combination 13	loads	0.0	0.0	-1.0
	reactions in nodes	0.0	0.0	1.0
	reactions on lines	0.0	0.0	0.0
	contact 1D	0.0	0.0	0.0
	contact 2D	0.0	0.0	0.0

4. Deflection

4.1. Deformations on member; uz: NC101

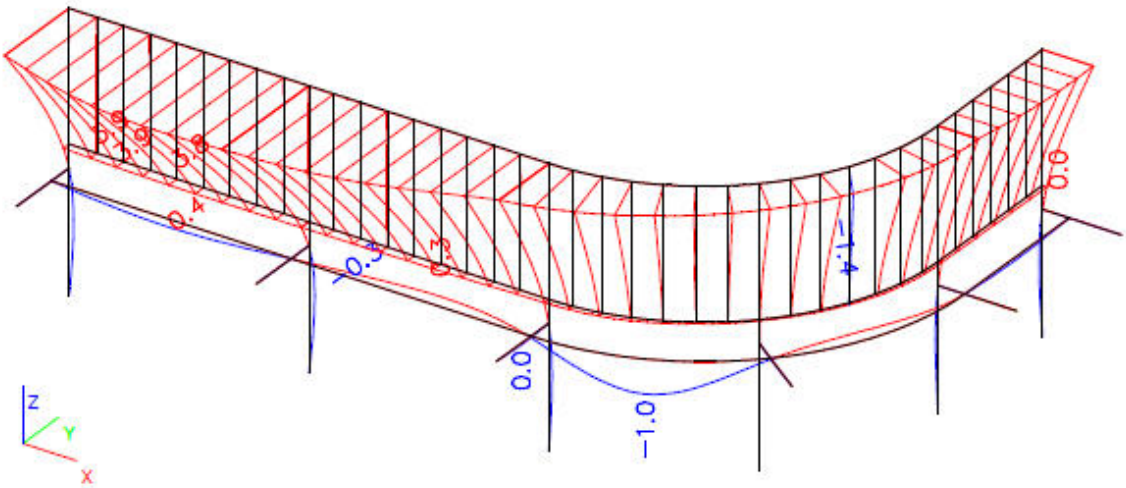

LETTENWEG 118, 4123 ALLSCHWIL, SWITZERLAND
TEL.: +41 (0)61 501 8210 / +41 (0)79 508 1651
REGISTERED IN SWITZERLAND | VAT REGISTRATION CHE-437.605.665

NEMETSCHEK Scia	Project	The Corniche, London
	Part	BAL-102 Type J
	Description	Aluminium - Welded assembly
	National code	EC - EN

5. Member code check

5.1. Stress; von Mises: Vertical members

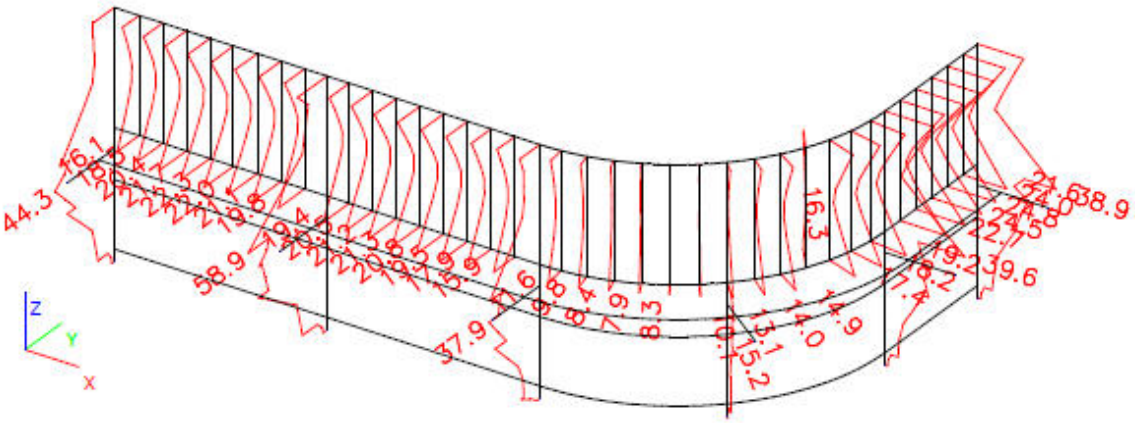

Nonlinear calculation, Extreme : Global
Selection : All
Nonlinear combinations : NC211
Cross-section : M1 - Rectangle (50; 20)
Values : Normal -, Normal +, Shear, von Mises, Fatigue, Kappa, Sigma Y

Member	Case	dx [m]	Normal - [MPa]	Normal + [MPa]	Shear [MPa]	von Mises [MPa]	Fatigue [MPa]	Kappa [-]
B4	NC211	0.540	**-58.9**		0.0	**58.9**		
B4	NC211	0.540	**58.8**	58.8			0.0	1.00
B4	NC211	1.025	-22.1	**-22.1**			0.0	1.00
B4	NC211	0.540		**58.8**	0.0	58.8		
B3	NC211	0.000	0.1	0.1	**0.0**	0.1		
B5	NC211	0.782		0.1	**4.4**	7.7		
B3	NC211	0.000	0.1	0.1			0.0	**1.00**

Nonlinear calculation, Extreme : Global
Selection : All
Nonlinear combinations : NC211
Cross-section : M2 - Circle (15)
Values : Normal -, Normal +, Shear, von Mises, Fatigue, Kappa, Sigma Y

Member	Case	dx [m]	Normal - [MPa]	Normal + [MPa]	Shear [MPa]	von Mises [MPa]	Fatigue [MPa]	Kappa [-]
B37	NC211	0.000	**-24.8**		0.1	**24.8**		
B44	NC211	0.000	**15.5**	15.5			0.0	1.00
B31	NC211	0.000	-13.3	**-13.3**			0.0	1.00
B37	NC211	0.000		**24.8**	0.1	24.8		
B14	NC211	0.000	12.8	12.8			0.0	**1.00**
B21	NC211	0.000		13.1	**1.9**	13.5		
B14	NC211	0.000	12.8	12.8	0.3	12.8		

CASTLE
LETTENWEG 118, 4123 ALLSCHWIL, SWITZERLAND
TEL.: +41 (0)61 501 8210 / +41 (0)79 508 1651
REGISTERED IN SWITZERLAND | VAT REGISTRATION CHE-437.605.665

NEMETSCHEK Scia	Project	The Corniche, London
	Part	BAL-102 Type J
	Description	Aluminium - Welded assembly
	National code	EC - EN

5.2. Stress; von Mises: Horizontal members

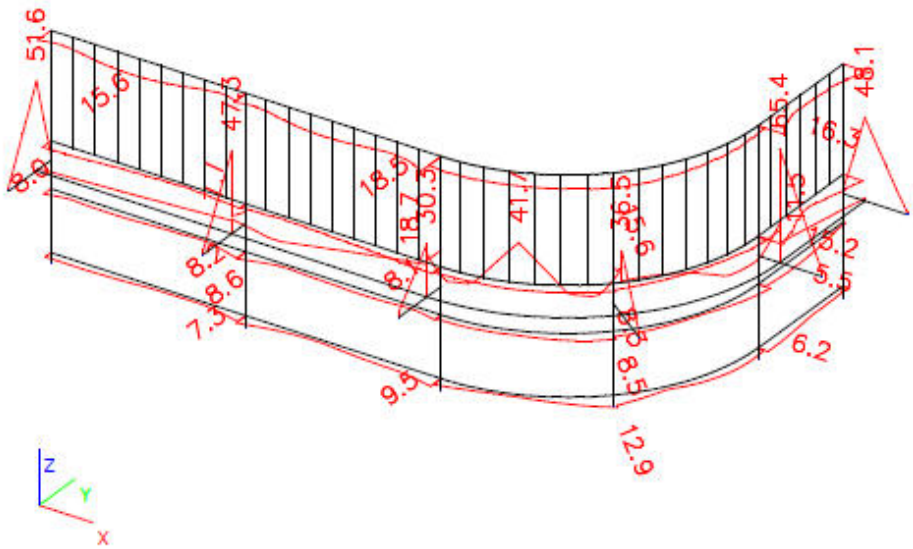

Nonlinear calculation, Extreme : Global
Selection : All
Nonlinear combinations : NC211
Cross-section : T1 - Tube (50; 3)
Values : Normal -, Normal +, Shear, von Mises, Fatigue, Kappa, Sigma Y

Member	Case	dx [m]	Normal - [MPa]	Normal + [MPa]	Shear [MPa]	von Mises [MPa]	Fatigue [MPa]	Kappa [-]
B135	NC211	0.588	**-14.4**		1.4	14.6		
B131	NC211	0.454	**15.0**	15.0			0.0	1.00
B133	NC211	0.899	-7.4	**-7.4**			0.0	1.00
B135	NC211	0.000		**16.0**	1.8	16.3		
B131	NC211	0.000	-3.5	-3.5			0.0	**1.00**
B133	NC211	0.899	-10.7		**6.0**	15.0		
B133	NC211	0.899		15.7	5.7	**18.5**		
B131	NC211	0.000	-3.5	-3.5	3.3	6.6		

Nonlinear calculation, Extreme : Global
Selection : All
Nonlinear combinations : NC211
Cross-section : T2 - O (50; 3; 50; 3)
Values : Normal -, Normal +, Shear, von Mises, Fatigue, Kappa, Sigma Y

Member	Case	dx [m]	Normal - [MPa]	Normal + [MPa]	Shear [MPa]	von Mises [MPa]	Fatigue [MPa]	Kappa [-]
B10	NC211	0.000	**-15.2**		0.0	15.2		
B10	NC211	0.000	**15.2**	15.2			0.0	1.00
B10	NC211	0.588	-11.4	**-11.4**			0.0	1.00
B10	NC211	0.000		**15.2**	0.0	**15.2**		
B8	NC211	0.000	2.3	2.3			0.0	**1.00**
B8	NC211	0.587		2.3	**3.7**	6.9		
B8	NC211	0.000	2.3	2.3	0.0	2.3		

Nonlinear calculation, Extreme : Global
Selection : All
Nonlinear combinations : NC211
Cross-section : T3 - O (70; 3; 30; 3)
Values : Normal -, Normal +, Shear, von Mises, Fatigue, Kappa, Sigma Y

CASTLE
LETTENWEG 118, 4123 ALLSCHWIL, SWITZERLAND
TEL.: +41 (0)61 501 8210 / +41 (0)79 508 1651
REGISTERED IN SWITZERLAND | VAT REGISTRATION CHE-437.605.665

NEMETSCHEK Scia	Project	The Corniche, London
	Part	BAL-102 Type J
	Description	Aluminium - Welded assembly
	National code	EC - EN

Member	Case	dx [m]	Normal - [MPa]	Normal + [MPa]	Shear [MPa]	von Mises [MPa]	Fatigue [MPa]	Kappa [-]
B9	NC211	0.383	**-41.7**		0.0	**41.7**		
B9	NC211	0.383	**21.9**	21.9			0.0	1.00
B9	NC211	0.868	-20.1	**-20.1**			0.0	1.00
B9	NC211	0.383		**36.7**	0.0	36.7		
B1	NC211	0.000	-1.6	-1.6			0.0	**1.00**
B9	NC211	0.150	-5.4		**7.1**	13.4		
B1	NC211	0.000	-1.6	-1.6	0.0	1.6		

Nonlinear calculation, Extreme : Global
Selection : All
Nonlinear combinations : NC211
Cross-section : T4 - Rectangle (50; 12)
Values : Normal -, Normal +, Shear, von Mises, Fatigue, Kappa, Sigma Y

Member	Case	dx [m]	Normal - [MPa]	Normal + [MPa]	Shear [MPa]	von Mises [MPa]	Fatigue [MPa]	Kappa [-]
B49	NC211	0.100	**-65.4**		0.0	**65.4**		
B49	NC211	0.100	**52.3**	52.3			0.0	1.00
B52	NC211	0.100	-51.2	**-51.2**			0.0	1.00
B49	NC211	0.100		**60.2**	0.0	60.2		
B48	NC211	0.000	-0.6	-0.6			0.0	**1.00**
B50	NC211	0.000	-1.7		**12.0**	20.8		
B48	NC211	0.000	-0.6	-0.6	0.0	0.6		

6. Factored reaction forces

6.1. Reactions @ Base Support: ULS Envelope

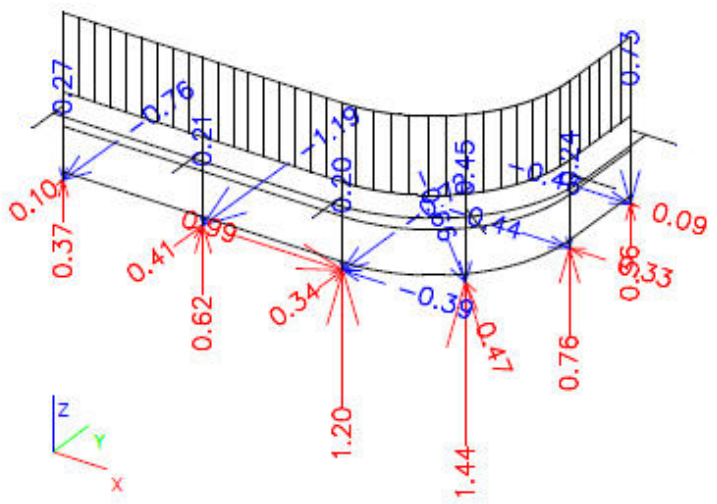

Nonlinear calculation, Extreme : Global
Selection : Named selection - Support - base
Class : Ultimate
Rotated supports

Support	Case	Rx [kN]	Ry [kN]	Rz [kN]	Mx [kNcm]	My [kNcm]	Mz [kNcm]
Sn6/N10	NC232	**-0.39**	0.01	0.15	0.00	0.00	0.00
Sn6/N10	NC231	**0.99**	-0.04	0.21	0.00	0.00	0.00
Sn5/N8	NC211	0.00	**-1.19**	0.03	0.00	0.00	0.00
Sn26/N255	NC224	0.00	**0.47**	0.58	0.00	0.00	0.00
Sn8/N12	NC222	0.00	-0.32	**-0.73**	0.00	0.00	0.00
Sn26/N255	NC222	0.00	0.17	**1.44**	0.00	0.00	0.00

CASTLE
LETTENWEG 118, 4123 ALLSCHWIL, SWITZERLAND
TEL.: +41 (0)61 501 8210 / +41 (0)79 508 1651
REGISTERED IN SWITZERLAND | VAT REGISTRATION CHE-437.605.665

NEMETSCHEK Scia	Project	The Corniche, London
	Part	BAL-102 Type J
	Description	Aluminium - Welded assembly
	National code	EC - EN

Support	Case	Rx [kN]	Ry [kN]	Rz [kN]	Mx [kNcm]	My [kNcm]	Mz [kNcm]
Sn26/N255	NC211	0.00	-0.53	0.80	0.00	0.00	0.00

6.2. Reactions @ Strut Support: ULS Envelope

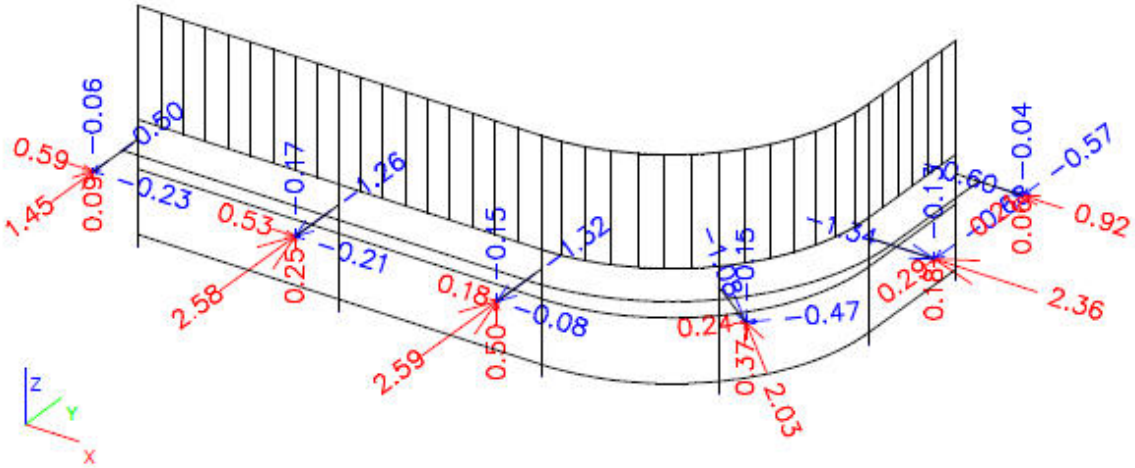

Nonlinear calculation, Extreme : Global
Selection : Named selection - Support - strut
Class : Ultimate
Rotated supports

Support	Case	Rx [kN]	Ry [kN]	Rz [kN]	Mx [kNcm]	My [kNcm]	Mz [kNcm]
Sn19/N93	NC231	**-0.68**	2.28	0.02	0.00	0.00	0.00
Sn16/N99	NC231	**0.59**	0.06	0.02	0.00	0.00	0.00
Sn19/N93	NC223	0.16	**-1.34**	-0.11	0.00	0.00	0.00
Sn18/N95	NC212	0.10	**2.59**	0.49	0.00	0.00	0.00
Sn17/N97	NC213	0.33	-1.26	**-0.17**	0.00	0.00	0.00
Sn18/N95	NC222	-0.03	1.69	**0.50**	0.00	0.00	0.00
Sn16/N99	NC211	0.29	0.96	0.01	**0.00**	**0.00**	**0.00**

CASTLE
LETTENWEG 118, 4123 ALLSCHWIL, SWITZERLAND
TEL.: +41 (0)61 501 8210 / +41 (0)79 508 1651
REGISTERED IN SWITZERLAND | VAT REGISTRATION CHE-437.605.665

2.5 Type C Balustrade

Refer to structural analysis results in section 2.5.3.

2.5.1 Deflection check

δ_{max}	=	5.2	mm	
δ_{allow} = min{1100/65; 15}	=	15.0	mm	**0.35** < 1.0

2.5.2 Stress check to BS EN 1999-1-1

i Vertical members

Max. Von mises stress, σ_{max}	=	72.6	N/mm^2	

EN AW-6082 T6

$\sigma_{HAZ,Rd}$ = 0.5·250/1.1	=	125.0	N/mm^2	**0.58** < 1.0

ii Horizontal members

Max. Von mises stress, σ_{max}	=	50.6	N/mm^2	
Max. HAZ stress, σ_{HAZ}	=	28.8	N/mm^2	

EN AW-6060 T6

$\sigma_{el,Rd}$ = 140/1.1	=	127.27	N/mm^2	**0.40** < 1.0
$\sigma_{HAZ,Rd}$ = 0.43·140/1.1	=	54.73	N/mm^2	**0.53** < 1.0

2.5.3 Structural analysis – Type C balustrade

NEMETSCHEK Scia	Project	The Corniche, London
	Part	BAL-102 Type C
	Description	Aluminium - Welded assembly
	National code	EC - EN

1. Structural model

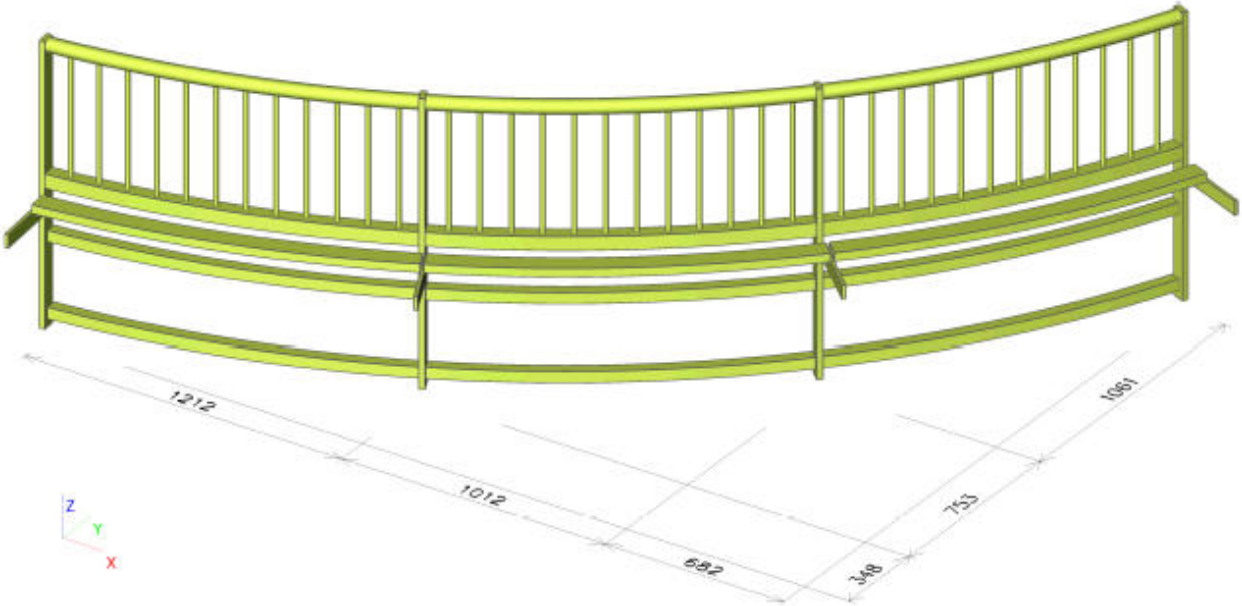

1.1. Parameters

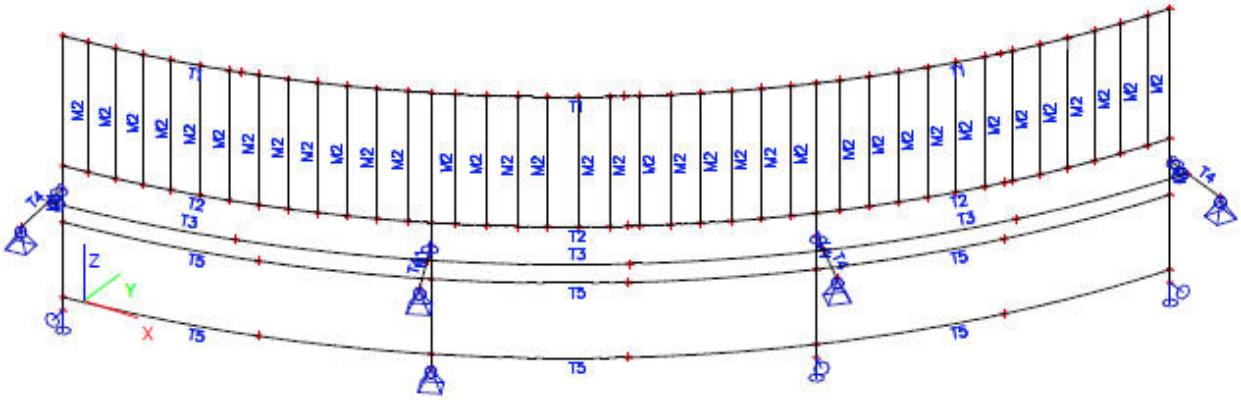

1.2. Materials

Name	Type	Unit mass [kg/m³]	E mod [MPa]	Poisson - nu	G mod [MPa]	Thermal exp [m/mK]
EN-AW 6060 T6	Aluminium	2700.00	7.0000e+04	0.3	2.6923e+04	0.00
EN-AW 6082 T6	Aluminium	2700.00	7.0000e+04	0.3	2.6923e+04	0.00

CASTLE
LETTENWEG 118, 4123 ALLSCHWIL, SWITZERLAND
TEL.: +41 (0)61 501 8210 / +41 (0)79 508 1651
REGISTERED IN SWITZERLAND | VAT REGISTRATION CHE-437.605.665

NEMETSCHEK Scia	Project	The Corniche, London
	Part	BAL-102 Type C
	Description	Aluminium - Welded assembly
	National code	EC - EN

1.3. Cross-sections

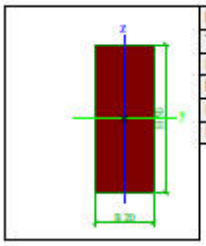

Name	M1	A [cm²]	10.00	
Type	Rectangle	A y, z [cm²]	8.33	8.33
Detailed	50; 20	I y, z [cm⁴]	20.83	3.33
Item material	EN-AW 6082 T6	I w [cm⁶], t [cm⁴]	3.59	9.95
Fabrication	general	Wel y, z [cm³]	8.33	3.33
Use 2D FEM analysis	✓	Wpl y, z [cm³]	12.50	5.00
		d y, z [mm]	0	0
		c YUCS, ZUCS [mm]	10	25
		α [deg]	0.00	

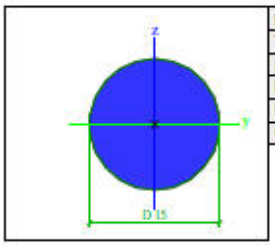

Name	M2	A [cm²]	1.77	
Type	Circle	A y, z [cm²]	1.59	1.59
Detailed	15	I y, z [cm⁴]	0.25	0.25
Item material	EN-AW 6082 T6	I w [cm⁶], t [cm⁴]	0.00	0.50
Fabrication	general	Wel y, z [cm³]	0.33	0.33
Use 2D FEM analysis	✓	Wpl y, z [cm³]	0.56	0.56
		d y, z [mm]	0	0
		c YUCS, ZUCS [mm]	7	8
		α [deg]	0.00	

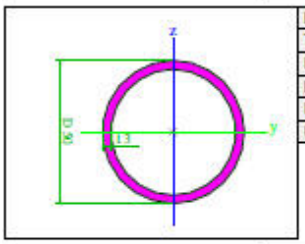

Name	T1	A [cm²]	4.43	
Type	Tube	A y, z [cm²]	2.97	2.97
Detailed	50; 3	I y, z [cm⁴]	12.28	12.28
Item material	EN-AW 6060 T6	I w [cm⁶], t [cm⁴]	0.00	23.96
Fabrication	extrusion	Wel y, z [cm³]	4.91	4.91
Use 2D FEM analysis	✓	Wpl y, z [cm³]	6.64	6.64
		d y, z [mm]	0	0
		c YUCS, ZUCS [mm]	25	25
		α [deg]	0.00	

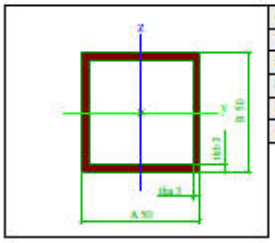

Name	T2	A [cm²]	5.64	
Type	O	A y, z [cm²]	2.90	2.90
Detailed	50; 3; 50; 3	I y, z [cm⁴]	20.85	20.85
Item material	EN-AW 6060 T6	I w [cm⁶], t [cm⁴]	0.09	30.69
Fabrication	extrusion	Wel y, z [cm³]	8.34	8.34
Use 2D FEM analysis	✓	Wpl y, z [cm³]	9.95	9.95
		d y, z [mm]	0	0
		c YUCS, ZUCS [mm]	25	25
		α [deg]	0.00	

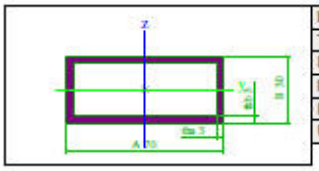

Name	T3	A [cm²]	5.64	
Type	O	A y, z [cm²]	3.92	1.78
Detailed	70; 3; 30; 3	I y, z [cm⁴]	8.38	33.32
Item material	EN-AW 6060 T6	I w [cm⁶], t [cm⁴]	7.98	20.67
Fabrication	extrusion	Wel y, z [cm³]	5.58	9.52
Use 2D FEM analysis	✓	Wpl y, z [cm³]	6.53	12.17
		d y, z [mm]	0	0
		c YUCS, ZUCS [mm]	35	15
		α [deg]	0.00	

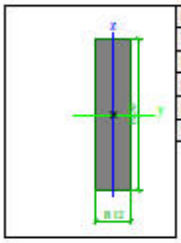

Name	T4	A [cm²]	6.00	
Type	Rectangle	A y, z [cm²]	5.00	5.00
Detailed	50; 12	I y, z [cm⁴]	12.50	0.72
Item material	EN-AW 6060 T6	I w [cm⁶], t [cm⁴]	1.16	2.44
Fabrication	general	Wel y, z [cm³]	5.00	1.20
Use 2D FEM analysis	✓	Wpl y, z [cm³]	7.50	1.80
		d y, z [mm]	0	0
		c YUCS, ZUCS [mm]	6	25
		α [deg]	0.00	

CASTLE
LETTENWEG 118, 4123 ALLSCHWIL, SWITZERLAND
TEL.: +41 (0)61 501 8210 / +41 (0)79 508 1651
REGISTERED IN SWITZERLAND | VAT REGISTRATION CHE-437.605.665

NEMETSCHEK Scia	Project	The Corniche, London
	Part	BAL-102 Type C
	Description	Aluminium - Welded assembly
	National code	EC - EN

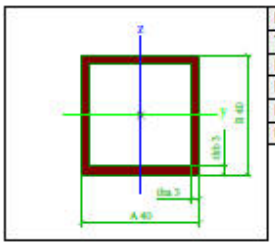

Name	T5	A [cm²]	4.44	
Type	O	A y, z [cm²]	2.31	2.31
Detailed	40; 3; 40; 3	I y, z [cm⁴]	10.20	10.20
Item material	EN-AW 6060 T6	I w [cm⁶], t [cm⁴]	0.04	15.12
Fabrication	extrusion	Wel y, z [cm³]	5.10	5.10
Use 2D FEM analysis	✓	Wpl y, z [cm³]	6.17	6.17
		d y, z [mm]	0	0
		c YUCS, ZUCS [mm]	20	20
		α [deg]	0.00	

Name	Mass [kg]	Surface [m²]	Volume [cm³]
Total results :	46.73	4.901	17306.41

Material	Mass [kg]	Surface [m²]	Unit volume mass [kg/m³]	Volume [cm³]
EN-AW 6060 T6	27.33	3.504	2700.00	10121.60
EN-AW 6082 T6	19.40	1.397	2700.00	7184.81

2. Loads [kN, kN/m]

2.1. LC1 - D: Dead load

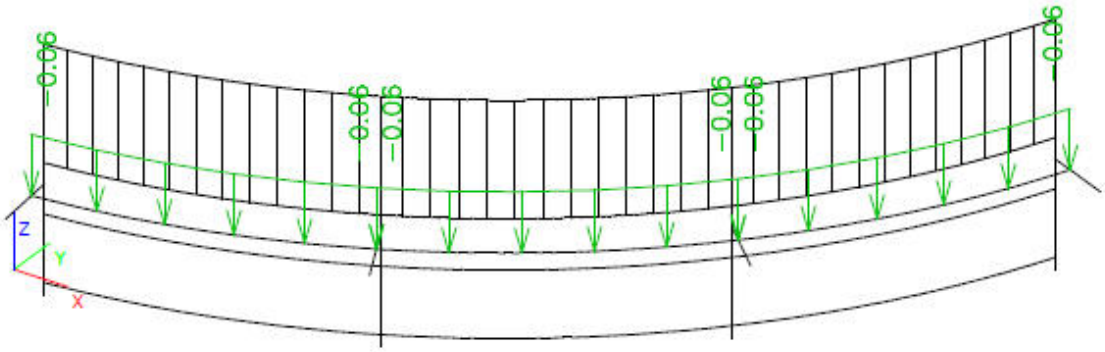

2.2. LC2 - I: Imposed load

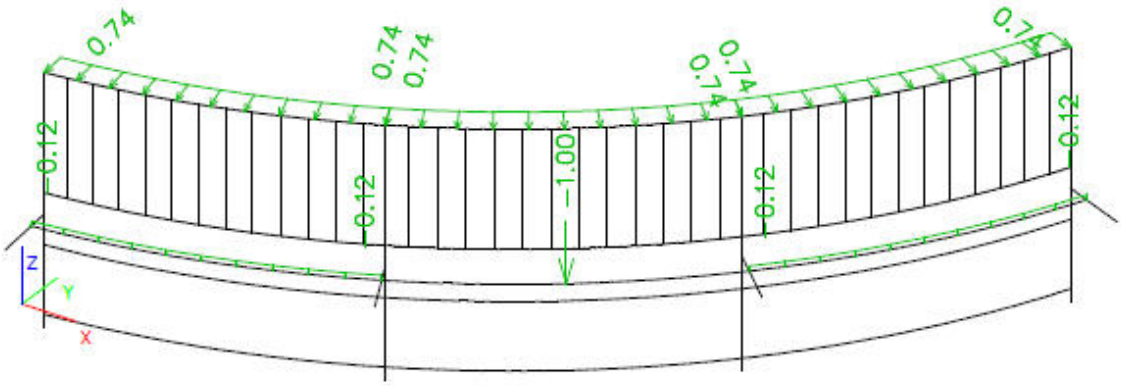

CASTLE
LETTENWEG 118, 4123 ALLSCHWIL, SWITZERLAND
TEL.: +41 (0)61 501 8210 / +41 (0)79 508 1651
REGISTERED IN SWITZERLAND | VAT REGISTRATION CHE-437.605.665

NEMETSCHEK Scia		
	Project	The Corniche, London
	Part	BAL-102 Type C
	Description	Aluminium - Welded assembly
	National code	EC - EN

2.3. LC3 - W: Wind load

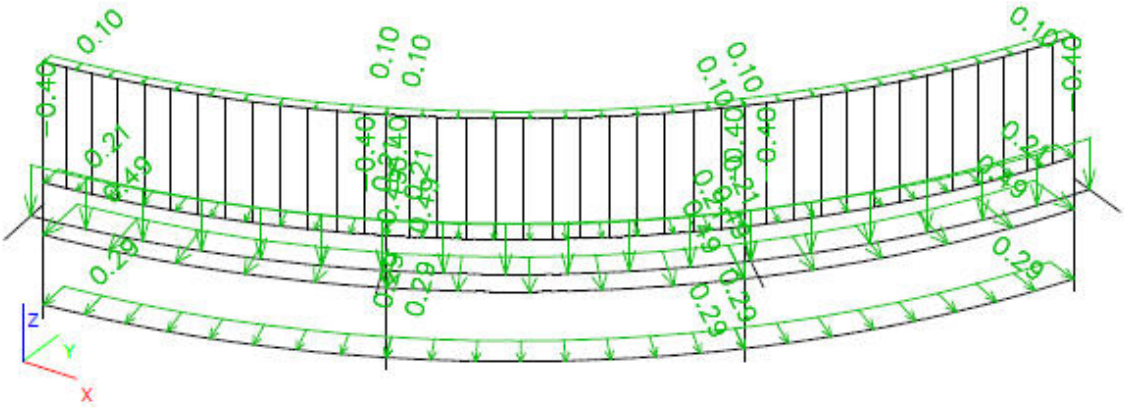

2.4. LC4 - T1: Thermal load - Summer

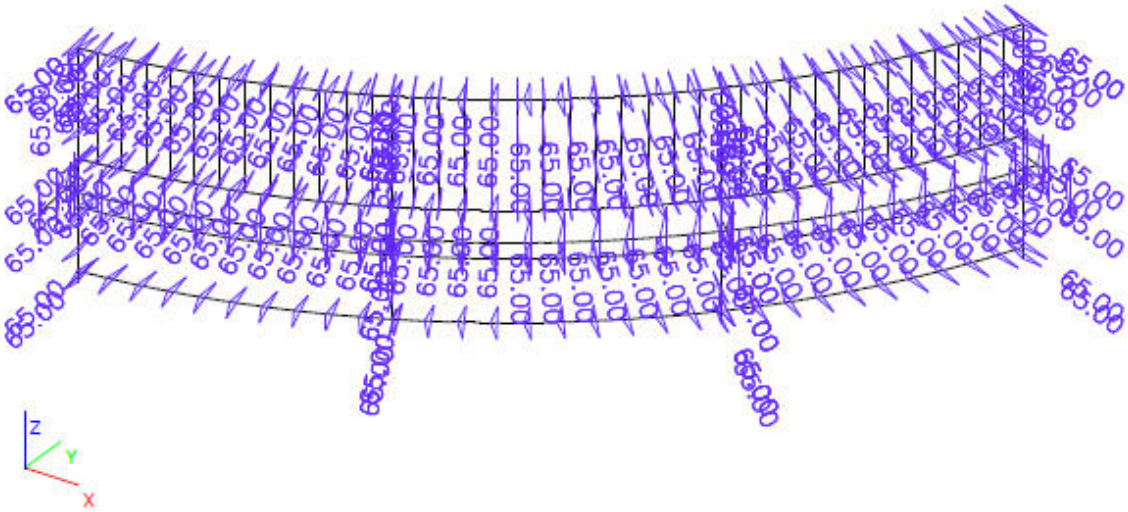

LETTENWEG 118, 4123 ALLSCHWIL, SWITZERLAND
TEL.: +41 (0)61 501 8210 / +41 (0)79 508 1651
REGISTERED IN SWITZERLAND | VAT REGISTRATION CHE-437.605.665

NEMETSCHEK Scia	Project	The Corniche, London
	Part	BAL-102 Type C
	Description	Aluminium - Welded assembly
	National code	EC - EN

2.5. LC5 - T2: Thermal load - Winter

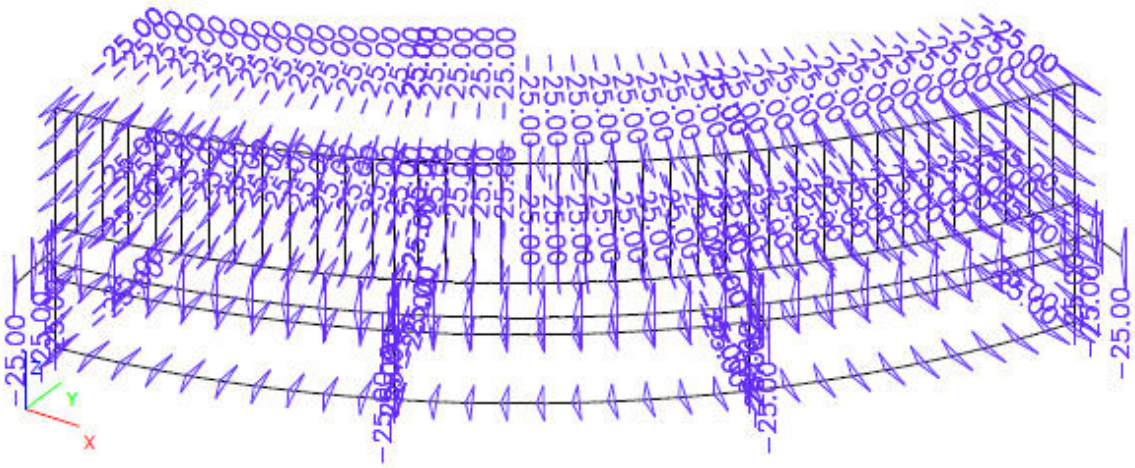

2.6. Nonlinear combinations

Name	Description	Type	Load cases	Coeff. [-]
NC101	(D) + (L)	Serviceability	LC0 - Selfweight	1.00
			LC1 - D - Dead load	1.00
			LC2 - L - Imposed/Live Load	1.00
NC102	(D) + (Wp)	Serviceability	LC0 - Selfweight	1.00
			LC1 - D - Dead load	1.00
			LC3 - W - Wind load Load	-1.00
NC103	(D) + (Ws)	Serviceability	LC0 - Selfweight	1.00
			LC1 - D - Dead load	1.00
			LC3 - W - Wind load Load	1.00
NC211	1.35(D) + 1.5(L) + 0.75(Wp) + 0.75(Ts)	Ultimate	LC0 - Selfweight	1.35
			LC1 - D - Dead load	1.35
			LC2 - L - Imposed/Live Load	1.50
			LC3 - W - Wind load Load	-0.75
			LC4 - T1 - Temperature Load, Summer	0.75
NC212	1.35(D) + 1.5(L) + 0.75(Ws) + 0.75(Ts)	Ultimate	LC0 - Selfweight	1.35
			LC1 - D - Dead load	1.35
			LC2 - L - Imposed/Live Load	1.50
			LC3 - W - Wind load Load	0.75
			LC4 - T1 - Temperature Load, Summer	0.75
NC213	1.35(D) + 1.5(Wp) + 0.9(Ts)	Ultimate	LC0 - Selfweight	1.35
			LC1 - D - Dead load	1.35
			LC3 - W - Wind load Load	-1.50
			LC4 - T1 - Temperature Load, Summer	0.90
NC214	1.35(D) + 1.5(Ws) + 0.9(Ts)	Ultimate	LC0 - Selfweight	1.35
			LC1 - D - Dead load	1.35
			LC3 - W - Wind load Load	1.50
			LC4 - T1 - Temperature Load, Summer	0.90
NC221	1.35(D) + 1.5(L) + 0.75(Wp) + 0.75(Tw)	Ultimate	LC0 - Selfweight	1.35
			LC1 - D - Dead load	1.35
			LC2 - L - Imposed/Live Load	1.50
			LC3 - W - Wind load Load	-0.75
			LC5 - T2 - Temperature Load, Winter	0.75
NC222	1.35(D) + 1.5(L) + 0.75(Ws) + 0.75(Tw)	Ultimate	LC0 - Selfweight	1.35
			LC1 - D - Dead load	1.35
			LC2 - L - Imposed/Live Load	1.50
			LC3 - W - Wind load Load	0.75

CASTLE
LETTENWEG 118, 4123 ALLSCHWIL, SWITZERLAND
TEL.: +41 (0)61 501 8210 / +41 (0)79 508 1651
REGISTERED IN SWITZERLAND | VAT REGISTRATION CHE-437.605.665

NEMETSCHEK Scia	Project	The Corniche, London
	Part	BAL-102 Type C
	Description	Aluminium - Welded assembly
	National code	EC - EN

Name	Description	Type	Load cases	Coeff. [-]
NC222	1.35(D) + 1.5(L) + 0.75(Ws) + 0.75(Tw)	Ultimate	LC5 - T2 - Temperature Load, Winter	0.75
NC223	1.35(D) + 1.5(Wp) + 0.9(Tw)	Ultimate	LC0 - Selfweight	1.35
			LC1 - D - Dead load	1.35
			LC3 - W - Wind load Load	-1.50
			LC5 - T2 - Temperature Load, Winter	0.90
NC224	1.35(D) + 1.5(Ws) + 0.9(Tw)	Ultimate	LC0 - Selfweight	1.35
			LC1 - D - Dead load	1.35
			LC3 - W - Wind load Load	1.50
			LC5 - T2 - Temperature Load, Winter	0.90
NC231	1.35(D) + 1.5(Ts)	Ultimate	LC0 - Selfweight	1.35
			LC1 - D - Dead load	1.35
			LC4 - T1 - Temperature Load, Summer	1.50
NC232	1.35(D) + 1.5(Tw)	Ultimate	LC0 - Selfweight	1.35
			LC1 - D - Dead load	1.35
			LC5 - T2 - Temperature Load, Winter	1.50

2.7. Result classes

Name	List
Serviceability	NC101
	NC102
	NC103
Ultimate	NC211
	NC212
	NC213
	NC214
	NC221
	NC222
	NC223
	NC224
	NC231
	NC232

3. Calculation protocol

Calculation protocol

Nonlinear calculation

Number of 2D elements	0
Number of 1D elements	896
Number of mesh nodes	849
Number of equations	5094
Maximum iterations	50
Number of increments	2
Type of nonlinearity	II. order
	local nonlinearities
Method (II. order)	Newton-Raphson
Bending theory	Mindlin

No. of combination	Start	End	No. of iterations
NC 1	26.05.2015 13:34	26.05.2015 13:34	4
NC 2	26.05.2015 13:34	26.05.2015 13:34	6
NC 3	26.05.2015 13:34	26.05.2015 13:34	4
NC 4	26.05.2015 13:34	26.05.2015 13:34	4
NC 5	26.05.2015 13:34	26.05.2015 13:34	6
NC 6	26.05.2015 13:34	26.05.2015 13:35	5
NC 7	26.05.2015 13:35	26.05.2015 13:35	5
NC 8	26.05.2015 13:35	26.05.2015 13:35	5
NC 9	26.05.2015 13:35	26.05.2015 13:35	5
NC 10	26.05.2015 13:35	26.05.2015 13:35	5
NC 11	26.05.2015 13:35	26.05.2015 13:35	5
NC 12	26.05.2015 13:35	26.05.2015 13:35	5
NC 13	26.05.2015 13:35	26.05.2015 13:35	5

Sum of loads and reactions.

	[kN]	X	Y	Z
Nonlinear combination 1	loads	1.6	-2.1	-2.0
	reactions in nodes	-1.6	2.1	2.0

CASTLE
LETTENWEG 118, 4123 ALLSCHWIL, SWITZERLAND
TEL.: +41 (0)61 501 8210 / +41 (0)79 508 1651
REGISTERED IN SWITZERLAND | VAT REGISTRATION CHE-437.605.665

NEMETSCHEK Scia

Project	The Corniche, London
Part	BAL-102 Type C
Description	Aluminium - Welded assembly
National code	EC - EN

Calculation protocol

	[kN]	X	Y	Z
	reactions on lines	0.0	0.0	0.0
	contact 1D	0.0	0.0	0.0
	contact 2D	0.0	0.0	0.0
Nonlinear combination 2	loads	0.6	-0.8	-1.8
	reactions in nodes	-0.6	0.8	1.8
	reactions on lines	0.0	0.0	0.0
	contact 1D	0.0	0.0	0.0
	contact 2D	0.0	0.0	0.0
Nonlinear combination 3	loads	-2.4	3.2	0.9
	reactions in nodes	2.4	-3.2	-0.9
	reactions on lines	0.0	0.0	0.0
	contact 1D	0.0	0.0	0.0
	contact 2D	0.0	0.0	0.0
Nonlinear combination 4	loads	2.4	-3.2	-2.3
	reactions in nodes	-2.4	3.2	2.3
	reactions on lines	0.0	0.0	0.0
	contact 1D	0.0	0.0	0.0
	contact 2D	0.0	0.0	0.0
Nonlinear combination 5	loads	4.2	-5.6	-4.2
	reactions in nodes	-4.2	5.6	4.2
	reactions on lines	0.0	0.0	0.0
	contact 1D	0.0	0.0	0.0
	contact 2D	0.0	0.0	0.0
Nonlinear combination 6	loads	-3.5	4.8	1.4
	reactions in nodes	3.5	-4.8	-1.4
	reactions on lines	0.0	0.0	0.0
	contact 1D	0.0	0.0	0.0
	contact 2D	0.0	0.0	0.0
Nonlinear combination 7	loads	3.5	-4.8	-3.3
	reactions in nodes	-3.5	4.8	3.3
	reactions on lines	0.0	0.0	0.0
	contact 1D	0.0	0.0	0.0
	contact 2D	0.0	0.0	0.0
Nonlinear combination 8	loads	0.6	-0.8	-1.8
	reactions in nodes	-0.6	0.8	1.8
	reactions on lines	0.0	0.0	0.0
	contact 1D	0.0	0.0	0.0
	contact 2D	0.0	0.0	0.0
Nonlinear combination 9	loads	4.2	-5.6	-4.2
	reactions in nodes	-4.2	5.6	4.2
	reactions on lines	0.0	0.0	0.0
	contact 1D	0.0	0.0	0.0
	contact 2D	0.0	0.0	0.0
Nonlinear combination 10	loads	-3.5	4.8	1.4
	reactions in nodes	3.5	-4.8	-1.4
	reactions on lines	0.0	0.0	0.0
	contact 1D	0.0	0.0	0.0
	contact 2D	0.0	0.0	0.0
Nonlinear combination 11	loads	3.5	-4.7	-3.3
	reactions in nodes	-3.5	4.7	3.3
	reactions on lines	0.0	0.0	0.0
	contact 1D	0.0	0.0	0.0
	contact 2D	0.0	0.0	0.0
Nonlinear combination 12	loads	0.0	0.0	-0.9
	reactions in nodes	-0.0	-0.0	0.9
	reactions on lines	0.0	0.0	0.0
	contact 1D	0.0	0.0	0.0
	contact 2D	0.0	0.0	0.0
Nonlinear combination 13	loads	0.0	0.0	-0.9
	reactions in nodes	0.0	0.0	0.9
	reactions on lines	0.0	0.0	0.0
	contact 1D	0.0	0.0	0.0
	contact 2D	0.0	0.0	0.0

CASTLE
LETTENWEG 118, 4123 ALLSCHWIL, SWITZERLAND
TEL.: +41 (0)61 501 8210 / +41 (0)79 508 1651
REGISTERED IN SWITZERLAND | VAT REGISTRATION CHE-437.605.665

NEMETSCHEK Scia	Project	The Corniche, London
	Part	BAL-102 Type C
	Description	Aluminium - Welded assembly
	National code	EC - EN

4. Deflection

4.1. Deformations on member; uz: NC101

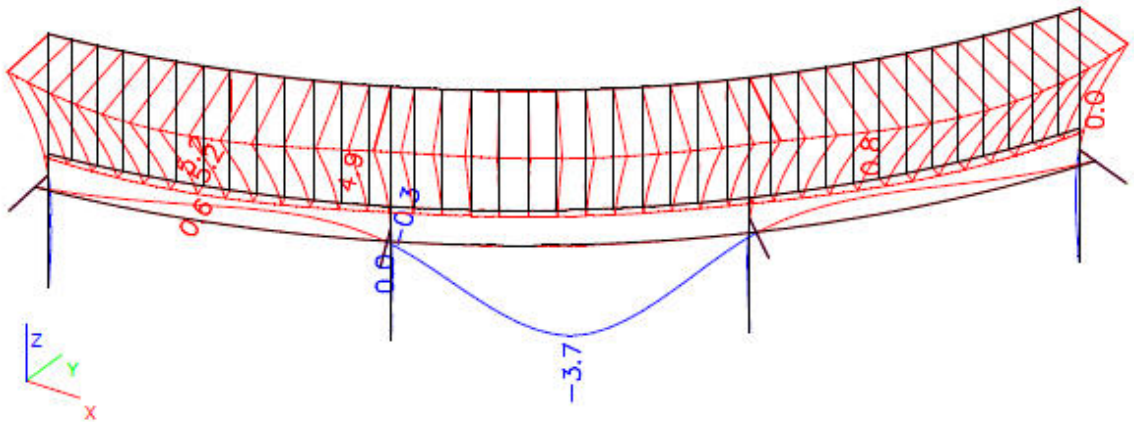

5. Member code check

5.1. Stress; von Mises: Vertical members

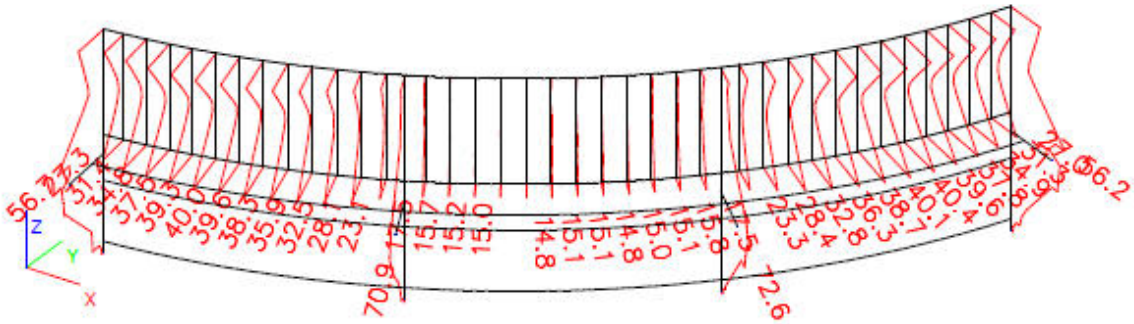

Nonlinear calculation, Extreme : Global
Selection : All
Nonlinear combinations : NC211
Cross-section : M1 - Rectangle (50; 20)
Values : Normal -, Normal +, Shear, von Mises, Fatigue, Kappa, Sigma Y

Member	Case	dx [m]	Normal - [MPa]	Normal + [MPa]	Shear [MPa]	von Mises [MPa]	Fatigue [MPa]	Kappa [-]
B56	NC211	0.455	**-72.6**		0.0	**72.6**		
B56	NC211	0.455	**71.2**	71.2			0.0	1.00
B53	NC211	1.025	-21.1	**-21.1**			0.0	1.00
B56	NC211	0.455		**71.2**	0.0	71.2		
B53	NC211	0.000	0.4	0.4	**0.0**	0.4		
B57	NC211	0.540	-25.9		**5.4**	27.5		
B53	NC211	0.000	0.4	0.4			0.0	**1.00**

CASTLE
LETTENWEG 118, 4123 ALLSCHWIL, SWITZERLAND
TEL.: +41 (0)61 501 8210 / +41 (0)79 508 1651
REGISTERED IN SWITZERLAND | VAT REGISTRATION CHE-437.605.665

NEMETSCHEK Scia	Project	The Corniche, London
	Part	BAL-102 Type C
	Description	Aluminium - Welded assembly
	National code	EC - EN

Nonlinear calculation, Extreme : Global
Selection : All
Nonlinear combinations : NC211
Cross-section : M2 - Circle (15)
Values : Normal -, Normal +, Shear, von Mises, Fatigue, Kappa, Sigma Y

Member	Case	dx [m]	Normal - [MPa]	Normal + [MPa]	Shear [MPa]	von Mises [MPa]	Fatigue [MPa]	Kappa [-]
B88	NC211	0.000	**-40.4**		0.7	**40.4**		
B87	NC211	0.000	**20.8**	20.8			0.0	1.00
B88	NC211	0.485	-10.3	**-10.3**			0.0	1.00
B88	NC211	0.000		**40.4**	0.7	40.4		
B54	NC211	0.000	10.1	10.1			0.0	**1.00**
B93	NC211	0.243		4.2	**2.3**	5.7		
B54	NC211	0.000	10.1	10.1	2.1	10.7		

5.2. Stress; von Mises: Horizontal members

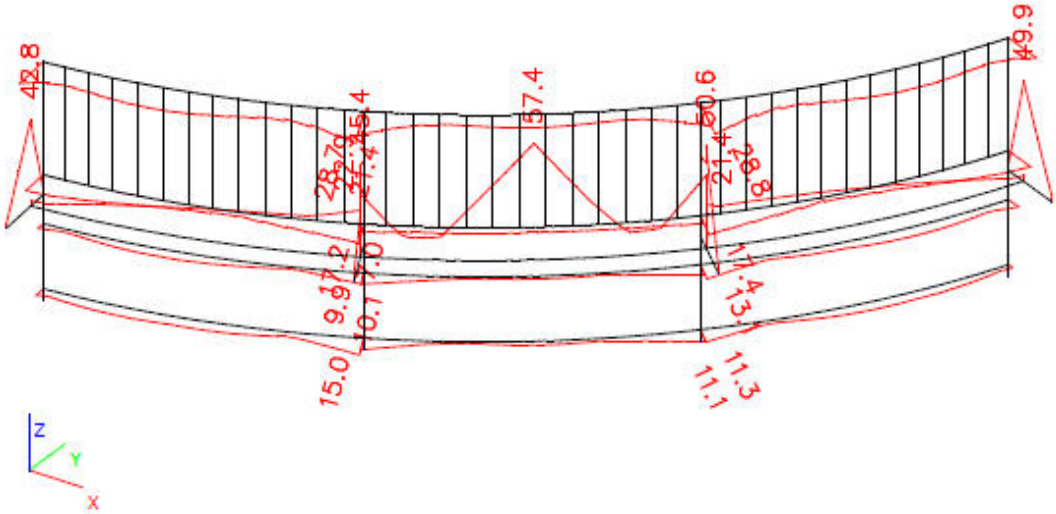

Nonlinear calculation, Extreme : Global
Selection : All
Nonlinear combinations : NC211
Cross-section : T1 - Tube (50; 3)
Values : Normal -, Normal +, Shear, von Mises, Fatigue, Kappa, Sigma Y

Member	Case	dx [m]	Normal - [MPa]	Normal + [MPa]	Shear [MPa]	von Mises [MPa]	Fatigue [MPa]	Kappa [-]
B137	NC211	0.000	**-24.5**		3.0	25.0		
B121	NC211	0.541	**18.0**	18.0			0.0	1.00
B137	NC211	0.000	-15.8	**-15.8**			0.0	1.00
B137	NC211	0.000		**28.4**	3.0	**28.8**		
B121	NC211	0.000	-4.0	-4.0			0.0	**1.00**
B137	NC211	1.268	-17.2		**6.1**	20.2		
B121	NC211	0.000	-4.0	-4.0	5.8	10.9		

Nonlinear calculation, Extreme : Global
Selection : All
Nonlinear combinations : NC211
Cross-section : T2 - O (50; 3; 50; 3)
Values : Normal -, Normal +, Shear, von Mises, Fatigue, Kappa, Sigma Y

CASTLE
LETTENWEG 118, 4123 ALLSCHWIL, SWITZERLAND
TEL.: +41 (0)61 501 8210 / +41 (0)79 508 1651
REGISTERED IN SWITZERLAND | VAT REGISTRATION CHE-437.605.665

Project	The Corniche, London
Part	BAL-102 Type C
Description	Aluminium - Welded assembly
National code	EC - EN

Member	Case	dx [m]	Normal - [MPa]	Normal + [MPa]	Shear [MPa]	von Mises [MPa]	Fatigue [MPa]	Kappa [-]
B125	NC211	0.000	**-17.4**		0.0	**17.4**		
B125	NC211	0.000	**16.6**	16.6			0.0	1.00
B125	NC211	1.268	-14.2	**-14.2**			0.0	1.00
B125	NC211	0.000		**17.1**	0.0	17.1		
B122	NC211	0.000	-13.1	-13.1			0.0	**1.00**
B125	NC211	1.268	-0.1		**5.6**	9.7		
B122	NC211	0.000	-13.1	-13.1	0.0	13.1		

Nonlinear calculation, Extreme : Global
Selection : All
Nonlinear combinations : NC211
Cross-section : T3 - O (70; 3; 30; 3)
Values : Normal -, Normal +, Shear, von Mises, Fatigue, Kappa, Sigma Y

Member	Case	dx [m]	Normal - [MPa]	Normal + [MPa]	Shear [MPa]	von Mises [MPa]	Fatigue [MPa]	Kappa [-]
B126	NC211	0.652	**-57.4**		0.0	**57.4**		
B126	NC211	0.652	**50.9**	50.9			0.0	1.00
B126	NC211	0.000	-27.3	**-27.3**			0.0	1.00
B126	NC211	0.652		**54.1**	0.0	54.1		
B123	NC211	0.000	-1.2	-1.2			0.0	**1.00**
B126	NC211	1.014		0.1	**6.2**	10.8		
B123	NC211	0.000	-1.2	-1.2	0.0	1.2		

Nonlinear calculation, Extreme : Global
Selection : All
Nonlinear combinations : NC211
Cross-section : T4 - Rectangle (50; 12)
Values : Normal -, Normal +, Shear, von Mises, Fatigue, Kappa, Sigma Y

Member	Case	dx [m]	Normal - [MPa]	Normal + [MPa]	Shear [MPa]	von Mises [MPa]	Fatigue [MPa]	Kappa [-]
B95	NC211	0.100	**-50.6**		0.0	**50.6**		
B95	NC211	0.100	**43.6**	43.6			0.0	1.00
B58	NC211	0.100	-42.8	**-42.8**			0.0	1.00
B94	NC211	0.100		**46.1**	0.0	46.1		
B58	NC211	0.000	-1.7	-1.7			0.0	**1.00**
B96	NC211	0.100	-18.8		**23.9**	45.4		
B58	NC211	0.000	-1.7	-1.7	0.0	1.7		

LETTENWEG 118, 4123 ALLSCHWIL, SWITZERLAND
TEL.: +41 (0)61 501 8210 / +41 (0)79 508 1651
REGISTERED IN SWITZERLAND | VAT REGISTRATION CHE-437.605.665

NEMETSCHEK Scia	Project	The Corniche, London
	Part	BAL-102 Type C
	Description	Aluminium - Welded assembly
	National code	EC - EN

6. Factored reaction forces

6.1. Reactions @ Base Support: ULS Envelope

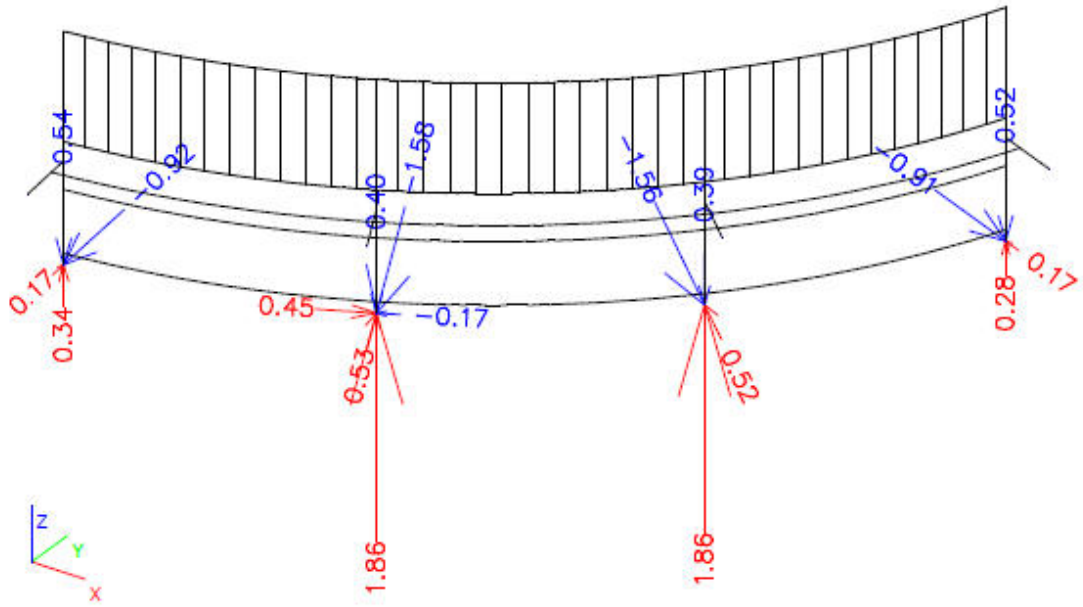

Nonlinear calculation, Extreme : Global
Selection : Named selection - Support - base
Class : Ultimate
Rotated supports

Support	Case	Rx [kN]	Ry [kN]	Rz [kN]	Mx [kNcm]	My [kNcm]	Mz [kNcm]
Sn10/N104	NC232	**-0.17**	0.01	0.30	0.00	0.00	0.00
Sn10/N104	NC231	**0.45**	-0.06	0.18	0.00	0.00	0.00
Sn10/N104	NC211	0.23	**-1.58**	1.17	0.00	0.00	0.00
Sn10/N104	NC224	-0.10	**0.53**	0.90	0.00	0.00	0.00
Sn9/N100	NC221	0.00	-0.89	**-0.54**	0.00	0.00	0.00
Sn10/N104	NC222	-0.07	-1.01	**1.86**	0.00	0.00	0.00
Sn12/N108	NC211	0.00	-0.91	-0.50	**0.00**	**0.00**	**0.00**

CASTLE
LETTENWEG 118, 4123 ALLSCHWIL, SWITZERLAND
TEL.: +41 (0)61 501 8210 / +41 (0)79 508 1651
REGISTERED IN SWITZERLAND | VAT REGISTRATION CHE-437.605.665

NEMETSCHEK Scia	Project	The Corniche, London
	Part	BAL-102 Type C
	Description	Aluminium - Welded assembly
	National code	EC - EN

6.2. Reactions @ Strut Support: ULS Envelope

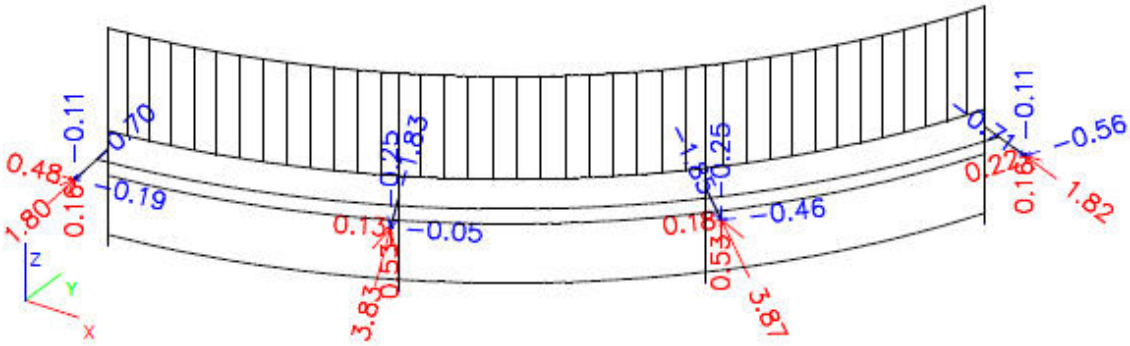

Nonlinear calculation, Extreme : Global
Selection : Named selection - Support - strut
Class : Ultimate
Rotated supports

Support	Case	Rx [kN]	Ry [kN]	Rz [kN]	Mx [kNcm]	My [kNcm]	Mz [kNcm]
Sn24/N183	NC231	**-0.56**	0.16	0.02	0.00	0.00	0.00
Sn21/N111	NC231	**0.48**	0.14	0.02	0.00	0.00	0.00
Sn23/N185	NC223	0.11	**-1.85**	-0.24	0.00	0.00	0.00
Sn23/N185	NC212	-0.21	**3.87**	0.53	0.00	0.00	0.00
Sn23/N185	NC213	-0.29	-1.57	**-0.25**	0.00	0.00	0.00
Sn22/N187	NC212	0.05	3.83	**0.53**	0.00	0.00	0.00
Sn24/N183	NC211	-0.27	1.14	-0.05	**0.00**	**0.00**	**0.00**

CASTLE
LETTENWEG 118, 4123 ALLSCHWIL, SWITZERLAND
TEL.: +41 (0)61 501 8210 / +41 (0)79 508 1651
REGISTERED IN SWITZERLAND | VAT REGISTRATION CHE-437.605.665

3 Brackets and anchors

3.1 Strut connection

Detail

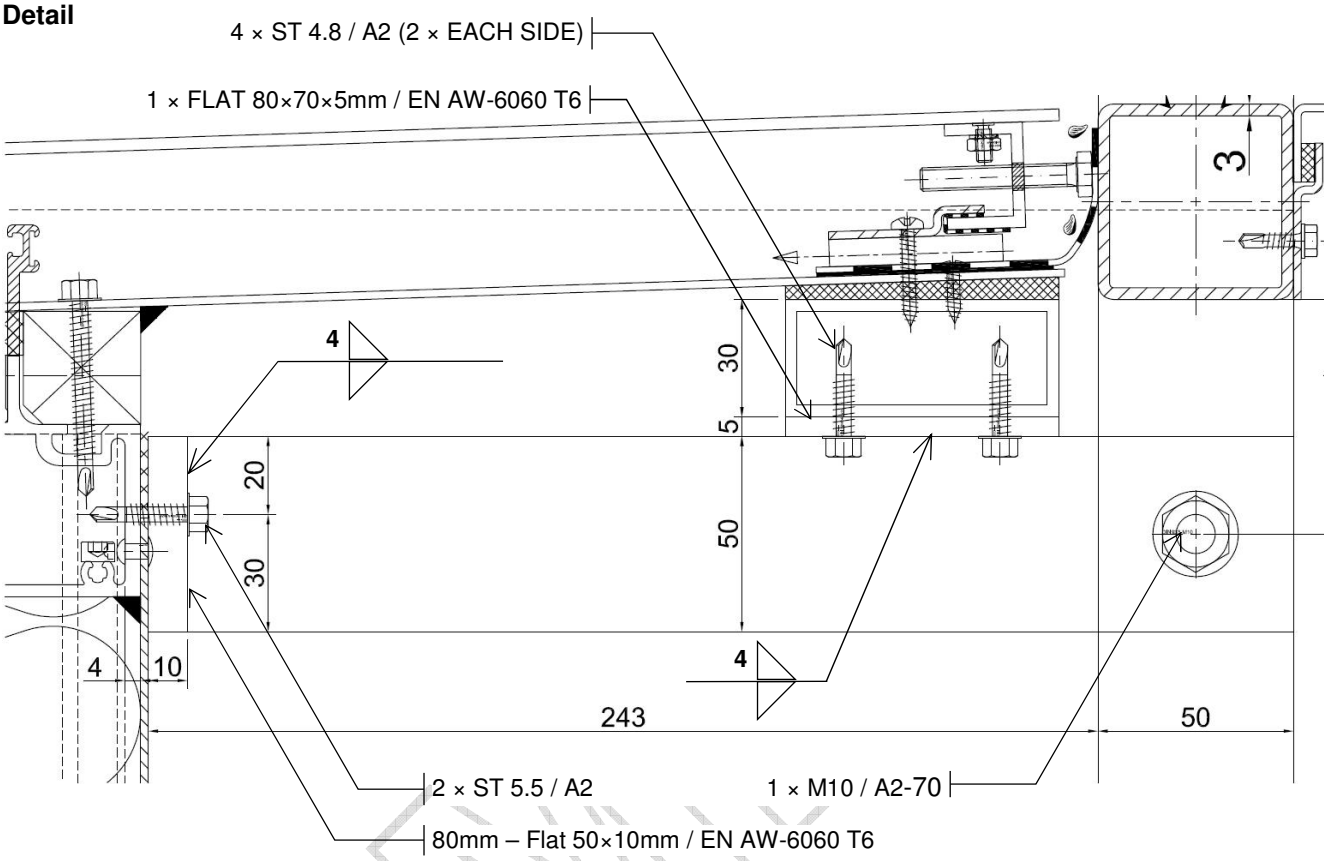

3.1.1 Design Forces

Refer to results of balustrade structural analysis in sections 2.3.3, 2.4.3 and 2.5.3,

Max. $R_{x,Ed}$	=	*0.59*	*kN*
Max. $R_{z,Ed}$	=	*0.58*	*kN*
Max. $+R_{y,Ed}$	=	*3.87*	*kN*
Max. $-R_{y,Ed}$	=	*-1.85*	*kN*

3.1.2 Fixing to spandrel element

i Self drilling screw check to BS EN 1999-1-4

$F_{v,Ed} = \sqrt{(0.59^2 + 0.58^2)}$	=	*0.83*	*kN*
$F_{t,Ed} = 1.85/2$	=	*0.92*	*kN*

2 × ST 5.5 / A2

$F_{v,Rd} = 12.50 \cdot 380/1.25$	=	*3.80*	*kN*	*0.22 < 1.0*
$F_{t,Rd} = 12.50 \cdot 560/1.25$	=	*5.60*	*kN*	*0.16 < 1.0*
$0.22 + 0.16/1.4$	=			*0.33 < 1.0*
$F_{b,Rd} = 1.5 \cdot 5.5 \cdot 4.0 \cdot 170/1.25$	=	*4.49*	*kN*	*0.18 < 1.0*

$F_{o,Rd} = 0.65 \cdot 5.5 \cdot 4.0 \cdot 170/1.25$ = 1.94 kN <u>0.47 < 1.0</u>

$0.18 + 0.47$ = <u>0.65 < 1.0</u>

ii End plate check to BS EN 1999-1-1

V_{Ed} = 0.92

$M_{Ed} = 0.92 \cdot 20$ = 18.4 kN·mm

80mm – Flat 50×10mm / EN AW-6060 T6

$M_{el,Rd} = 50 \cdot 10^2 / 6 \cdot 140/1.1$ = 106.06 kN·mm

iii Weld check to BS EN 1999-1-1

$\sigma_{w,Ed} = (3870+590)/(2 \cdot 2 \cdot 4 \cdot 50)$ = 5.58 N/mm^2

$\tau_{w\perp,Ed} = (3870+590)/(2 \cdot 2 \cdot 4 \cdot 50)$ = 5.58 N/mm^2

$\tau_{w//,Ed} = 580/(2 \cdot 0.707 \cdot 4 \cdot 50)$ = 2.05 N/mm^2

$f_{w,Ed} = \sqrt{[5.58^2 + 3(5.58^2 + 2.05^2)]}$ = 11.71 N/mm^2

4mm fillet Back-to-back

$f_{w,Rd} = 0.59 \cdot 170/1.35$ = 74.30 N/mm^2 <u>0.16 < 1.00</u>

3.1.3 Fixing to balustrade

$F_{v,Ed} = \sqrt{(3.87^2 + 0.58^2)}$ = 3.91 kN

1 × M10 / A2-70

$F_{v,Rd} = 0.5 \cdot 57.99 \cdot 700/1.25$ = 16.24 kN <u>0.24 < 1.0</u>

$F_{b,Rd} = 1.5 \cdot 10 \cdot 10 \cdot 170/1.25$ = 20.40 kN <u>0.19 < 1.0</u>

3.2 Base bracket

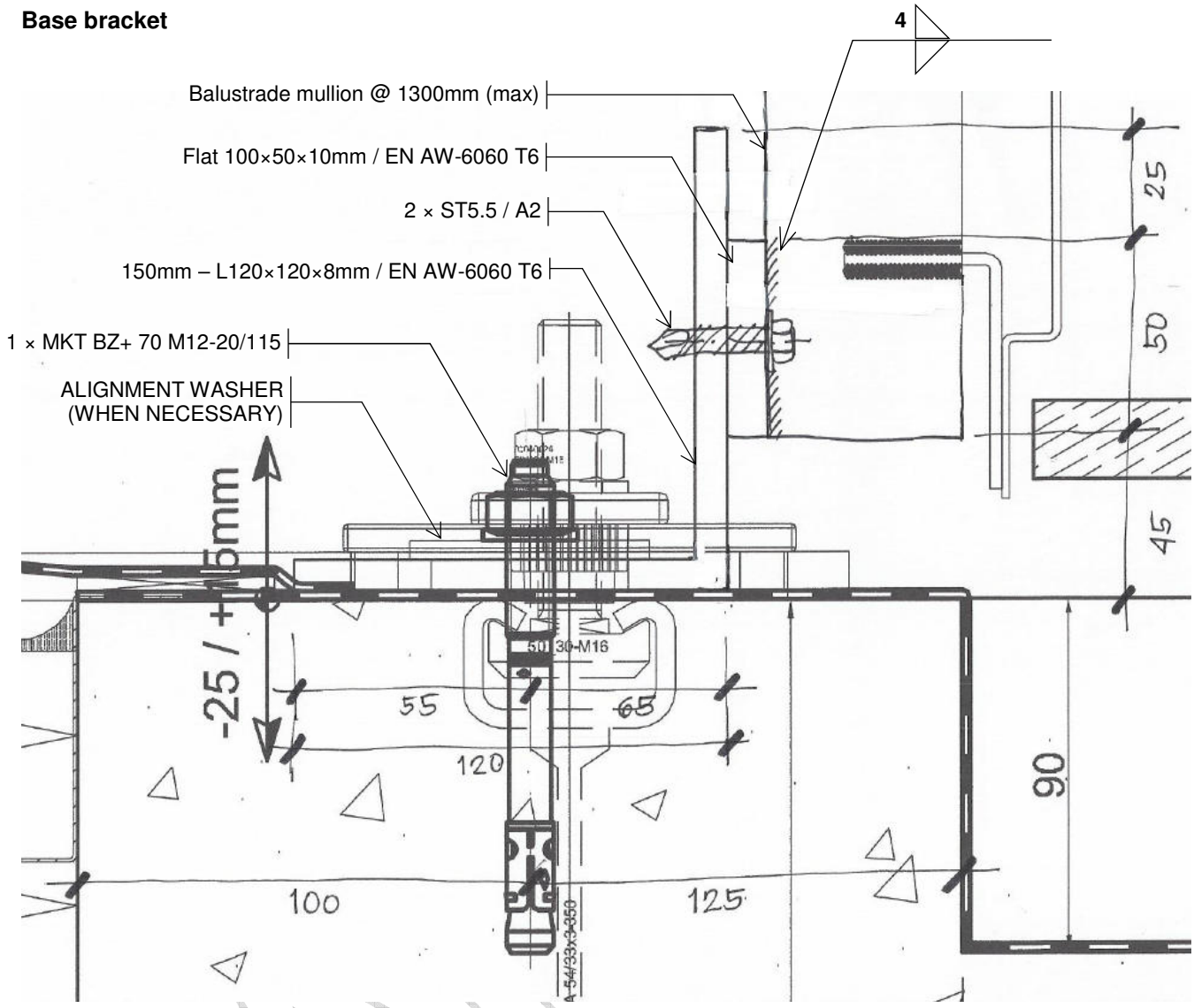

3.2.1 Design forces

Max. $R_{x,Ed}$	=	0.99	kN
Max. $R_{y,Ed}$	=	1.58	kN
Max. $R_{z,Ed}$	=	1.86	kN

3.2.2 Fixing to balustrade

i Self-drilling screws check to BS EN 1999-1-4

$F_{v,Ed} = [\sqrt{(0.99^2 + 1.86^2)}]/2$	=	1.05	kN	
$F_{t,Ed} = 1.58/2 + 0.99 \cdot 80/60$	=	2.11	kN	

2 × ST5.5 / A2

$F_{v,Rd} = 12.50 \cdot 380/1.25$	=	3.80	kN	0.28 < 1.0
$F_{b,Rd} = 1.5 \cdot 5.5 \cdot 8 \cdot 170/1.25$	=	8.98	kN	0.12 < 1.0
$F_{t,Rd} = 12.50 \cdot 560/1.25$	=	5.60	kN	0.38 < 1.0
$F_{o,Rd} = 0.65 \cdot 5.5 \cdot 8 \cdot 170/1.25$	=	3.89	kN	0.54 < 1.0

$0.38 + 0.54 = \underline{0.92 < 1.0}$

3.2.3 Fixing to slab

i Angle base plate

$M_{Ed} = 1.58 \cdot 120 = 189.6$ kN·mm

150mm – L120×120×8mm / EN AW-6060 T6 or EN AW-5754 H24/34

$M_{el,Rd} = 150 \cdot 8^2 / 6 \cdot 140 / 1.1 = 203.64$ kN·mm $\underline{0.93 < 1.0}$

ii Anchors

$V_{y,Sd} = 1.58$ kN

$V_{x,Sd} = 0.99$ kN

$M_{x,Sd} = 1.58 \cdot 0.12 = 0.19$ kN·m

$M_{x,Sd} = 0.99 \cdot 12 = 0.12$ kN·m

Provide: 1 × MKT BZ+ M12-20/115

Design office:	Lindner Fassaden GmbH
Person in charge:	LMC
Construction project:	The Corniche, London
Number:	
Position:	BAL-102 Base anchor

... a solid connection

Date: 26/05/2015

Input data:

Page 1 / 4

Concrete:
cracked concrete
concrete grade: C20/25

Reinforcement:
normal or no reinforcement
without edge reinforcement
with limitation of crack width wk ≤ 0.3mm

Anchor bending:
without anchor bending

Installation conditions:
hammer-drilled hole

Static loads

Tensile load:
N_{Sd} = 0.00 kN

Shear load:
V_{xSd} = 0.99 kN
V_{ySd} = -1.58 kN

Moments:
M_{xSd} = 0.19 kNm
M_{ySd} = 0.12 kNm
M_{zSd} = 0.00 kNm

Eccentric load
e_x = 0.0 mm
e_y = 0.0 mm

Anchor plate:
x = 150 mm
y = 80 mm
l_{x1} = 75 mm
l_{x2} = 75 mm
l_{y1} = 40 mm
l_{y2} = 40 mm

Edge distances:
c_{y1} = 100 mm
c_{y2} = 85 mm

Thickness of base material:
h = 315 mm

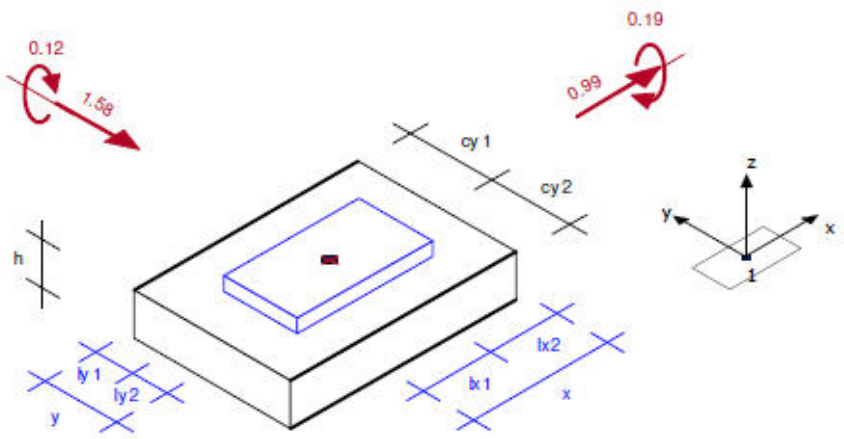

[kN, kNm]

Wedge Anchor BZ plus M12 hef 50
Designed acc. to ETAG 001, Annex C
Official approval ETA-99/0010: MKT BZ plus / BZ-IG

Go ahead, design okay!

Anchor Design Program Version 4.21

MKT Metall-Kunststoff-Technik GmbH & Co.KG - Auf dem Immel 2 - D-67685 Weilerbach - Tel.: +49 (0) 63 74 / 91 16 -0 - Fax: +49 (0) 63 74 / 91 16 60

4 Balustrades @ High Upstand

4.1 Members check

Refer to structural analysis in section 4.1.3.

4.1.1 Deflection check

δ_{max} = 14.8 mm

δ_{allow} = min{1100/65; 15} = 15.0 mm 0.91 < 1.0

4.1.2 Stress check to BS EN 1999-1-1

Maximum calculated Von Mises (or equivalent) stress in the analysis results.

i Members

$\sigma_{max} = \sqrt{(\sigma^2_{normal} + 3\tau^2_{shear})}$ = 121.3 N/mm^2

15mm / EN AW-6060 T6

$\sigma_{pl,Rd}$ = min{1.2·140/1.1; 170/1.25} = 136.0 N/mm^2 0.89 < 1.0

ii Welded plates

Max. $\sigma = \sqrt{(\sigma^2_{normal} + 3\tau^2_{shear})}$ = 119.9 N/mm^2

Max. $\sigma_{HAZ} = \sqrt{(\sigma^2_{normal} + 3\tau^2_{shear})}$ = 108.4 N/mm^2

15mm / EN AW-6082 T6

$\sigma_{el,Rd}$ = 260 N/mm^2 0.52 < 1.0

$\sigma_{HAZ,Rd}$ = 0.48·260/1.1 = 113.45 N/mm^2 0.96 < 1.0

4.1.3 Balustrade Type C – Structural analysis

NEMETSCHEK Scia	Project	The Corniche, London
	Part	BAL-102: Type C
	Description	Aluminium bolted assembly
	National code	EC - EN

1. Parameters

1.1. Structural model (rotated view)

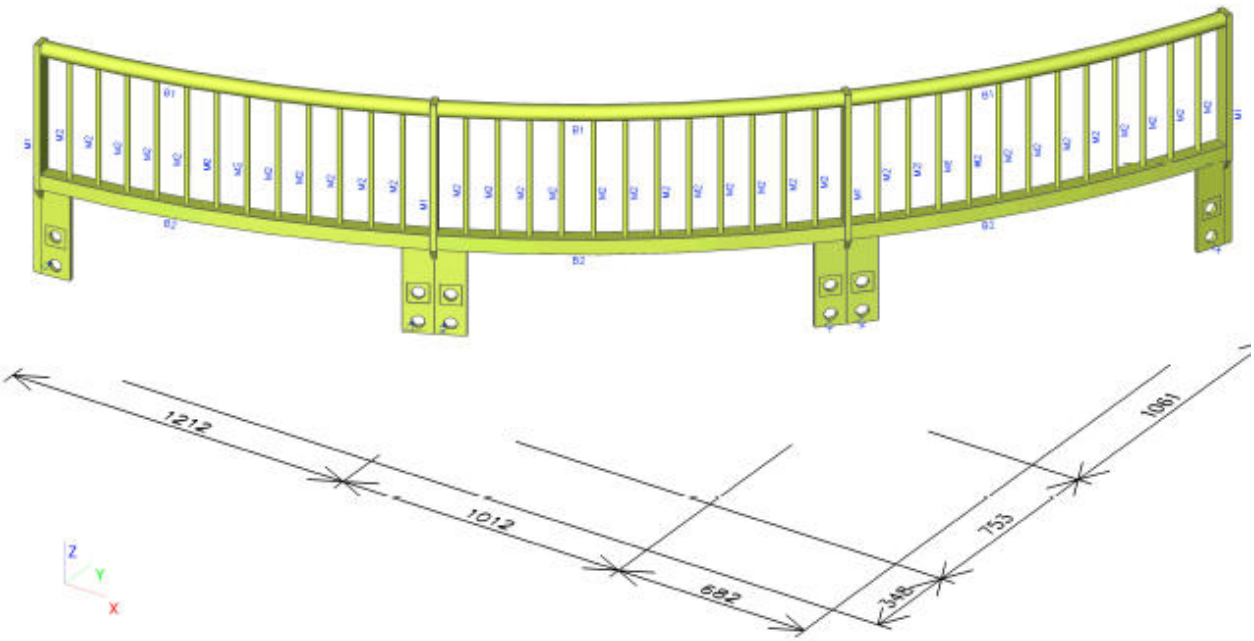

1.2. Materials

Name	Unit mass [kg/m³]	E mod [MPa]	Poisson - nu	G mod [MPa]	Thermal exp [m/mK]
EN AW-6060 T6	2700.00	7.0000e+04	0.3	2.6923e+04	0.00

Name	Type	Unit mass [kg/m³]	E mod [MPa]	Poisson - nu	G mod [MPa]	Thermal exp [m/mK]
EN-AW 6060 T6	Aluminium	2700.00	7.0000e+04	0.3	2.6923e+04	0.00

1.3. Cross-sections

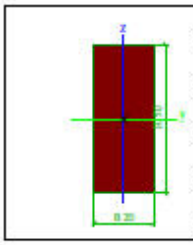

Name, Type	M1	Rectangle
Detailed	50; 20	
Item material, Fabrication	EN-AW 6082 T6	extrusion
A [cm²]	10.00	
A y, z [cm²]	8.33	8.33
I y, z [cm⁴]	20.83	3.33
I w [cm⁶], t [cm⁴]	3.59	9.95
c YUCS, ZUCS [mm]	10	25
Wel y, z [cm³]	8.33	3.33
Wpl y, z [cm³]	12.50	5.00

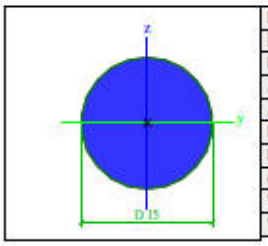

Name, Type	M2	Circle
Detailed	15	
Item material, Fabrication	EN-AW 6082 T6	extrusion
A [cm²]	1.77	
A y, z [cm²]	1.59	1.59
I y, z [cm⁴]	0.25	0.25
I w [cm⁶], t [cm⁴]	0.00	0.50
c YUCS, ZUCS [mm]	7	8
Wel y, z [cm³]	0.33	0.33
Wpl y, z [cm³]	0.56	0.56

CASTLE
LETTENWEG 118, 4123 ALLSCHWIL, SWITZERLAND
TEL.: +41 (0)61 501 8210 / +41 (0)79 508 1651
REGISTERED IN SWITZERLAND | VAT REGISTRATION CHE-437.605.665

NEMETSCHEK Scia	Project	The Corniche, London
	Part	BAL-102: Type C
	Description	Aluminium bolted assembly
	National code	EC - EN

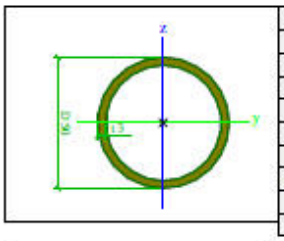

Name, Type	B1	Tube
Detailed	50; 3	
Item material, Fabrication	EN-AW 6060 T6	extrusion
A [cm²]	4.43	
A y, z [cm²]	2.97	2.97
I y, z [cm⁴]	12.28	12.28
I w [cm⁶], t [cm⁴]	0.00	23.96
c YUCS, ZUCS [mm]	25	25
Wel y, z [cm³]	4.91	4.91
Wpl y, z [cm³]	6.64	6.64

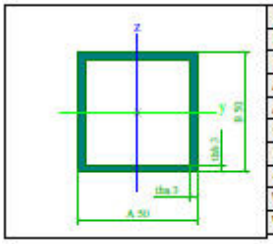

Name, Type	B2	O
Detailed	50; 3; 50; 3	
Item material, Fabrication	EN-AW 6060 T6	extrusion
A [cm²]	5.64	
A y, z [cm²]	2.90	2.90
I y, z [cm⁴]	20.85	20.85
I w [cm⁶], t [cm⁴]	0.09	30.69
c YUCS, ZUCS [mm]	25	25
Wel y, z [cm³]	8.34	8.34
Wpl y, z [cm³]	9.95	9.95

Name	Mass [kg]	Surface [m²]	Volume [cm³]
Total results :	31.84	2.628	11793.31

Material	Mass [kg]	Surface [m²]	Unit volume mass [kg/m³]	Volume [cm³]
EN AW-6060 T6	2.40	0.062	2700.00	888.77
EN-AW 6060 T6	10.34	1.358	2700.00	3829.76
EN-AW 6082 T6	19.10	1.208	2700.00	7074.79

2. Loads [kN, kN/m]

2.1. LC1: Dead load

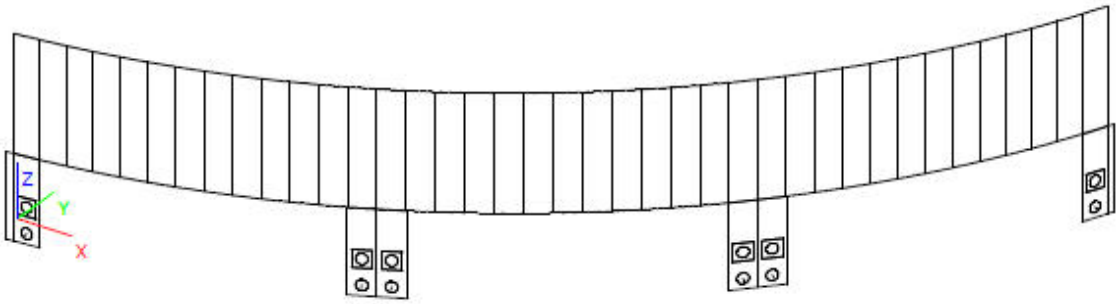

CASTLE
LETTENWEG 118, 4123 ALLSCHWIL, SWITZERLAND
TEL.: +41 (0)61 501 8210 / +41 (0)79 508 1651
REGISTERED IN SWITZERLAND | VAT REGISTRATION CHE-437.605.665

NEMETSCHEK Scia	Project	The Corniche, London
	Part	BAL-102: Type C
	Description	Aluminium bolted assembly
	National code	EC - EN

2.2. LC2: Imposed load

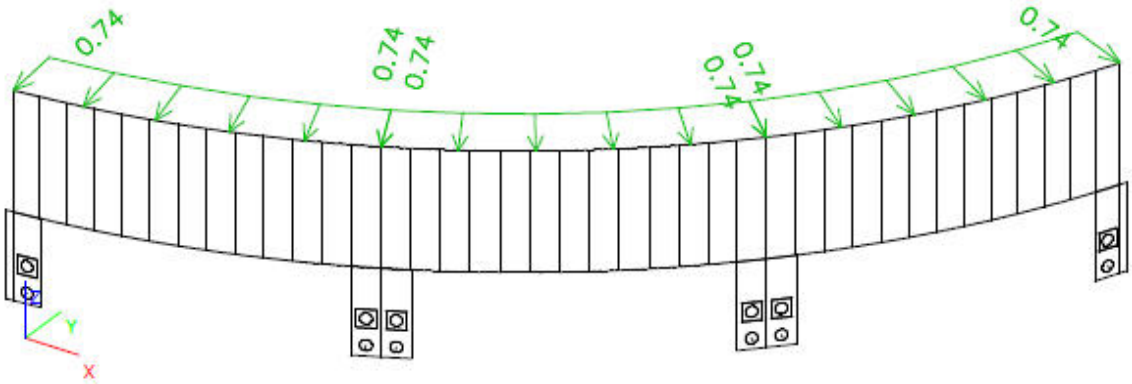

2.3. Nonlinear combinations

Name	Type	Load cases	Coeff. [-]
NC101	Serviceability	LC0 - Selfweight	1.00
		LC1 - D - Dead load	1.00
		LC2 - L - Imposed/Live Load	1.00
NC201	Ultimate	LC0 - Selfweight	1.35
		LC1 - D - Dead load	1.35
		LC2 - L - Imposed/Live Load	1.50

3. Calculation protocol

Calculation protocol

Nonlinear calculation

Number of 2D elements	687
Number of 1D elements	870
Number of mesh nodes	1461
Number of equations	8766
Maximum iterations	50
Number of increments	1
Type of nonlinearity	II. order
	local nonlinearities
Method (II. order)	Newton-Raphson
Bending theory	Mindlin

No. of combination	Start	End	No. of iterations
NC 1	18.05.2015 13:30	18.05.2015 13:33	11
NC 2	18.05.2015 13:33	18.05.2015 13:35	13

Sum of loads and reactions.

	[kN]	X	Y	Z
Nonlinear combination 1	loads	1.6	-2.1	-0.4
	reactions in nodes	4.9	-6.6	0.3
	reactions on lines	0.0	0.0	0.0
	contact 1D	0.0	0.0	0.0
	contact 2D	-6.5	8.7	0.1
Nonlinear combination 2	loads	2.4	-3.2	-0.6
	reactions in nodes	7.2	-9.9	0.4
	reactions on lines	0.0	0.0	0.0
	contact 1D	0.0	0.0	0.0
	contact 2D	-9.6	13.1	0.2

CASTLE
LETTENWEG 118, 4123 ALLSCHWIL, SWITZERLAND
TEL.: +41 (0)61 501 8210 / +41 (0)79 508 1651
REGISTERED IN SWITZERLAND | VAT REGISTRATION CHE-437.605.665

NEMETSCHEK Scia	Project	The Corniche, London
	Part	BAL-102: Type C
	Description	Aluminium bolted assembly
	National code	EC - EN

4. Analysis results

4.1. Deformations on member, NC101; uz

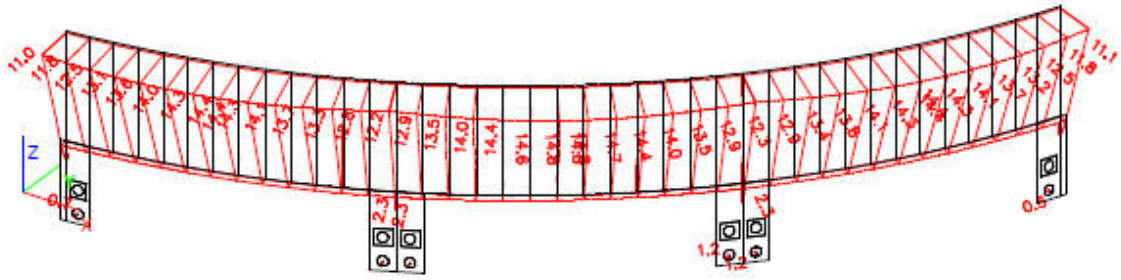

4.2. Stress, NC101; von Mises [N/mm²]

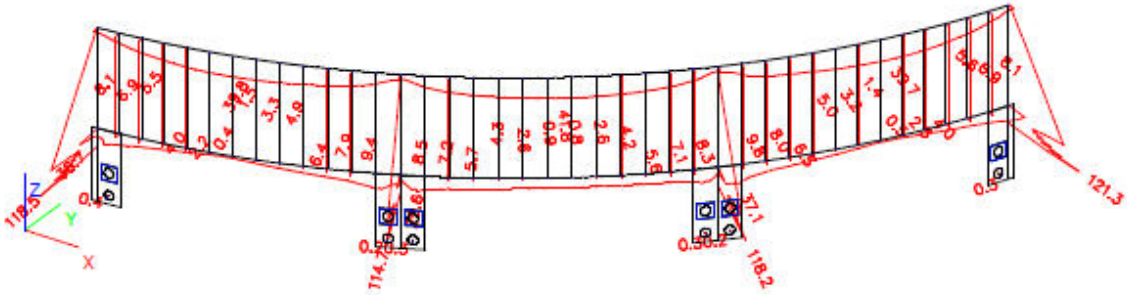

4.3. 2D member - Factored Stresses, NC201; sigE+

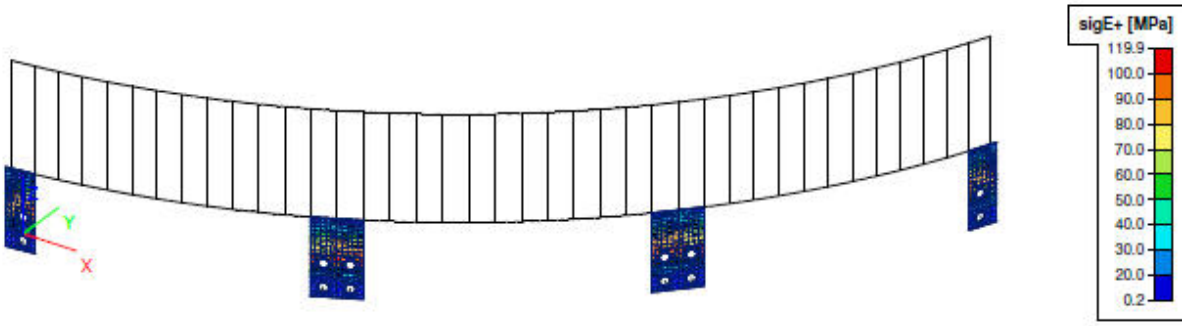

LETTENWEG 118, 4123 ALLSCHWIL, SWITZERLAND
TEL.: +41 (0)61 501 8210 / +41 (0)79 508 1651
REGISTERED IN SWITZERLAND | VAT REGISTRATION CHE-437.605.665

NEMETSCHEK Scia	Project	The Corniche, London
	Part	BAL-102: Type C
	Description	Aluminium bolted assembly
	National code	EC - EN

4.4. Factored Reaction Forces [kN]

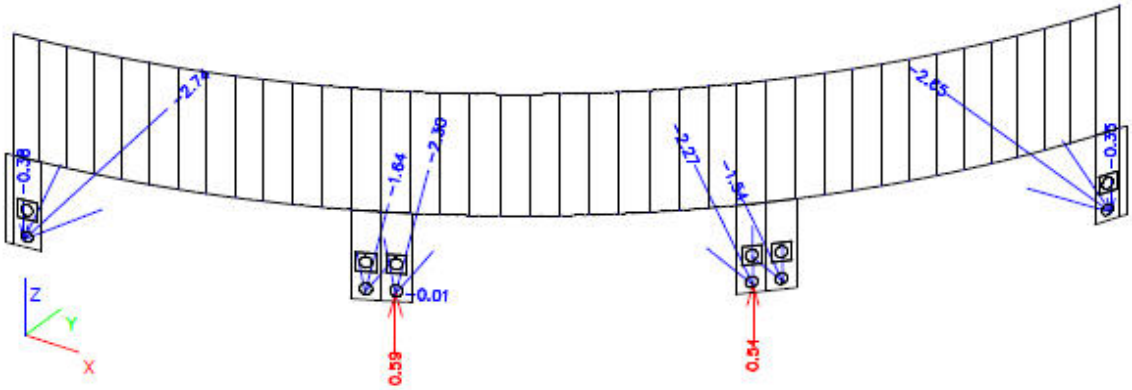

LETTENWEG 118, 4123 ALLSCHWIL, SWITZERLAND
TEL.: +41 (0)61 501 8210 / +41 (0)79 508 1651
REGISTERED IN SWITZERLAND | VAT REGISTRATION CHE-437.605.665

4.2 Brackets and anchors

4.2.1 Details

Upstand in (-25mm ~ +4mm)

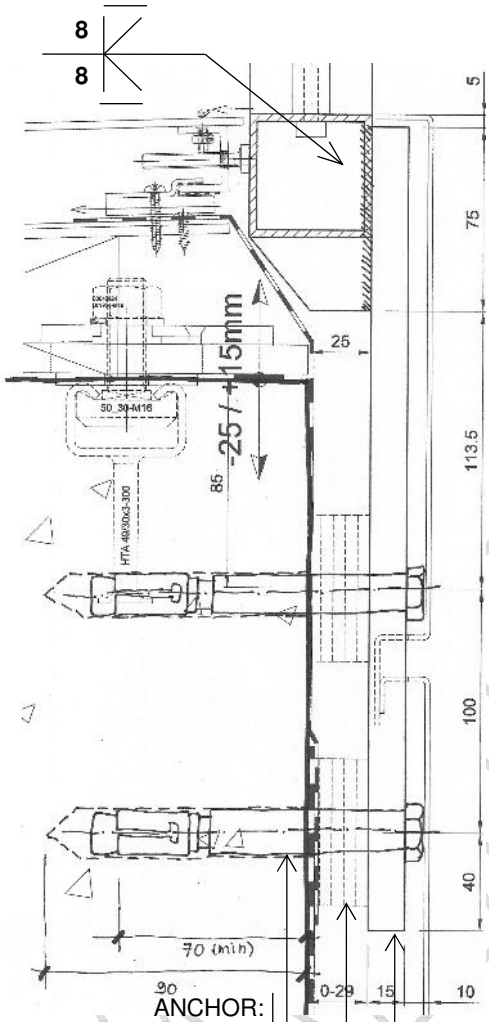

ANCHOR:
@ ENDS: 2 × HSL-3 M10/(65mm max)
@ INTERMEDIATE: 4 × HSL-3 M10/(65mm max)

METAL SHIM: 80mm×80mm

PLATE:
@ ENDS: 125×330×15mm / 6082 T6
@ INTERMEDIATE: 200×330×15mm / 6082 T6

Upstand out (+5mm ~ +25mm)

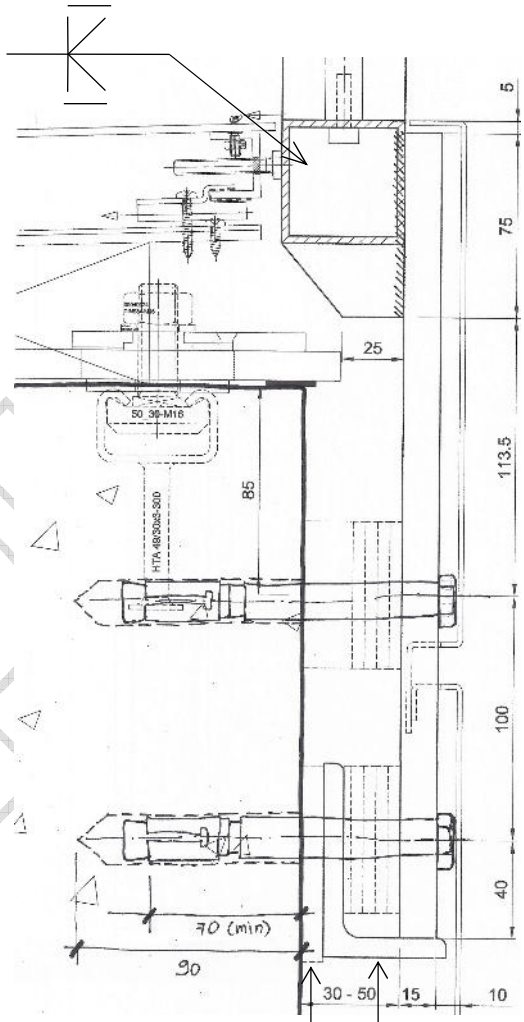

METAL SHIM: 80mm×100mm

SHELF ANGLE:
@ ENDS: 1 × 80mm – L100×50×8mm / 6060 T6
@ INT.: 2 × 80mm – L100×50×8mm / 6060 T6

4.2.2 Anchor Design Forces

From the results of structural analysis in section 4.1.3.

i Upstand in (-25mm ~ +4mm) considering 29mm stand-off distance

$V_{Sd} = 1.5+0.62 \quad = \quad 2.12 \quad kN$

$N_{Sd} \quad = \quad 2.48 \quad kN$

ii Upstand out (+5mm ~ +25mm) considering 15mm stand-off distance

$V_{Sd} = 1.5+0.62 \quad = \quad 2.12 \quad kN$

$N_{Sd} = 2.48 + 2.12 \cdot 50/(\tfrac{2}{3} 48) \quad = \quad 5.79 \quad kN$

www.hilti.ch

Profis Anchor 2.5.2

Company:	Lindner Fassaden GmbH	Page:	1
Specifier:		Project:	The Corniche, London
Address:		Fastening Point:	BAL-102
Phone I Fax:	|	Date:	18/05/2015
E-Mail:			

Specifier's comments:

1 Input data

Anchor type and size:	**HSL-3 M10**
Dynamic set or any suitable annular gap filling solution	
Effective embedment depth:	h_{ef} = 70 mm, h_{nom} = 90 mm
Material:	8.8
Approval No.:	ETA 02/0042
Issued I Valid:	10/01/2013 | 10/01/2018
Proof:	Design method ETAG (No. 001 Annex C/2010)
Stand-off installation:	without clamping (anchor); restraint level (baseplate): 2.00; e_b = 29 mm; t = 15 mm
	Hilti Grout: , multipurpose, $f_{c,Grout}$ = 30.00 N/mm²
Baseplate:	l_x x l_y x t = 100 mm x 100 mm x 15 mm; (Recommended plate thickness: not calculated)
Profile:	no profile
Base material:	cracked concrete, C35/45, f_{cc} = 45.00 N/mm²; h = 200 mm
Reinforcement:	No reinforcement or Reinforcement spacing >= 150 mm (any Ø) or >= 100 mm (Ø <= 10 mm)
	no longitudinal edge reinforcement

Geometry [mm] & Loading [kN, kNm]

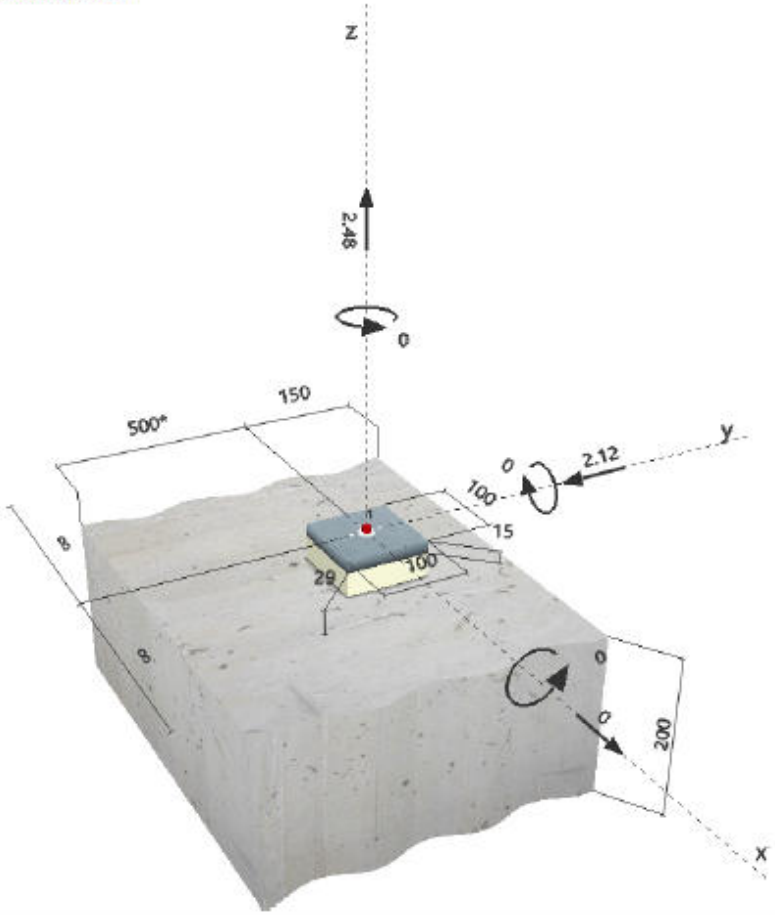

Input data and results must be checked for agreement with the existing conditions and for plausibility!