PROJECT	ENGINEER
SAMPLE PROJECT IN LONDON	
DOCUMENT NO.	REVISION
STR-CALC-253	0
TITLE	Pages
UNITISED CURTAIN WALL	65

LETTENWEG 118, 4123 ALLSCHWIL, SWITZERLAND
TEL.: +41 (0)61 501 8210 / +41 (0)79 508 1651
REGISTERED IN SWITZERLAND | VAT REGISTRATION CHE-437.605.665

Contents

1 Basic Data

1.1 References

1.1.1 Norms and Standards

[1] BS EN 1990:2002, Eurocode – Basis of structural design.

[2] BS EN 1999-1-1:2007, Eurocode 9 – Design of aluminium structures – Part 1-1: General structural rules.

[3] BS EN 14024:2004, Metal profiles with thermal barrier – Mechanical performance – Requirements, proof and tests for assessment.

[4] CWCT-2:2005, Standard for systemised building envelopes, Part 2: Loads, fixing and movement.

[5] CWCT-3:2005, Standard for systemised building envelopes, Part 3: Air, water and wind resistance.

[6] CWCT TU14, Technical update on Load combinations.

1.1.2 Document Reference

[7] *T-LS14/410868FE1401-0: Loads and load combinations.*

[8] *Performance Specification.* 24.10.2014.

[9] *Façade Maintenance Access Report.* October 2014

1.1.3 System Drawing Reference

[10] TE-01.1, Typical Unitised Bay / Panel Type 1 & 2 - Partial elevation

[11] TD-110, Typical Unitised Bay / Panel Type 1 & 2 - Horizontal section

[12] TD-111, Typical Unitised Bay / Panel Type 1 & 2 - Vertical section

1.1.4 Structural Analysis Software

[13] Nemetschek. *SCIA Engineer v.14.0.* Structural Analysis & Design Software for Construction and Engineering.

1.2 Materials

Minimum properties of materials used unless stated otherwise.

Part	Grade	Modulus of elasticity **E** [N/mm²]	Yield or 0.2% proof strength, f_o [N/mm²]	Tensile strength f_u [N/mm²]
Aluminium: $\gamma_{M0,M1} = 1.1$; $\gamma_{M2} = 1.25$				
Architectural profiles	EN AW-6060 T6	70 000	≥ 140	≥ 170
Structural profiles	EN AW-6005A T6	70 000	≥ 215	≥ 250
Architectural sheets	EN AW-5005 H14/H24	70 000	≥ 110	≥ 145
Structural plates & sheets	EN AW-5754 H14	70 000	≥ 190	≥ 240
Steel: $\gamma_{M0,M1} = 1.0$; $\gamma_{M2} = 1.1$				
General	S235	210 000	235	360
Stainless steel: $\gamma_{M0,M1} = 1.1$; $\gamma_{M2} = 1.25$				
General	1.4301	200 000	210	520

1.3 Loads

Loads are generally in accordance with load report [7].

1.3.1 Dead Load (D)

Selfweight of the framing profiles are generated by the software Scia.

Vision = *0.50 kN/m²* *- DGU: 10/AS/10 (maximum thickness)*

Spandrel infill = *0.40 kN/m²* *- includes metal sheets, insulation, etc.*

1.3.2 Wind Load (W)

Net pressure, $w_{p,k}$ = *+ 1.3 kN/m²*

Net suction, $w_{s,k}$ = *- 1.8 kN/m²*

1.3.3 Imposed/live load (L)

i Vertical load to internal ledges and horizontal members/surfaces

Point load, $Q_{Iv,k}$ = *1.0 kN* *- Vertical load to internal ledges and horiz. members/surfaces*

Uniform line load, $w_{Iv,k}$ = *0.6 kN/m* *- Vertical load to internal ledges and horiz. members/surfaces*

ii Barrier horizontal loads for external balcony and ground floor curtain walls

Line load, $q_{Ih,k}$ = *1.5 kN/m* *- applied at a height of 1.1m above FFL*

Point load, $Q_{Ih,k}$ = *1.5 kN* *- applied on square of 100mm side*

Infill load, $w_{Ih,k}$ = *1.5 kN/m²* *- applied within the height of 1.1m above FFL*

iii Barrier horizontal loads for internal balcony and upper floor curtain walls

Line load, $q_{Ih,k}$ = *0.74 kN/m* *- applied at a height of 1.1m above FFL*

Point load, $Q_{Ih,k}$ = *0.5 kN* *- applied on square of 100mm side*

Infill load, $w_{Ih,k}$ = *1.0 kN/m²* *- applied within the height of 1.1m above FFL*

iv Maintenance

Horizontal load to any component of the cladding acc. to CWCT cl. 2.3.3.

Point load, $Q_{Ih,k}$ = *0.5 kN* *- applied on square of 100mm side*

Vertical load to external fins,

Point load, $Q_{Iv,k}$ = *1.1 kN* *- applied on square of 100mm sides*

1.4 Deflection limits

Deflection limits in accordance with CWCT [4][5].

Deflection mode		Allowable deflection δ_{allow} [mm]	Reference
Frontal	H ≤ 3000	H/200 or 15 mm	CWCT 3.5.2.2 & EN 13830
	3000 < H < 7500	H/300 + 5	CWCT 3.5.2.2
	H ≥ 7500	H/250	CWCT 3.5.2.2 & BS 8118
Local	Supporting single glass	L/125	CWCT 3.5.2.4
	Supporting insulated glass	L/175 or 15 mm	CWCT 3.5.2.5
In-plane	-	L/500 or 3mm	CWCT 2.3.2.2 & EN 13830

2 Wall system

2.1 Typical curtain wall elements

Curtain Wall Elements with Free-standing Balustrade [TE-01.5]

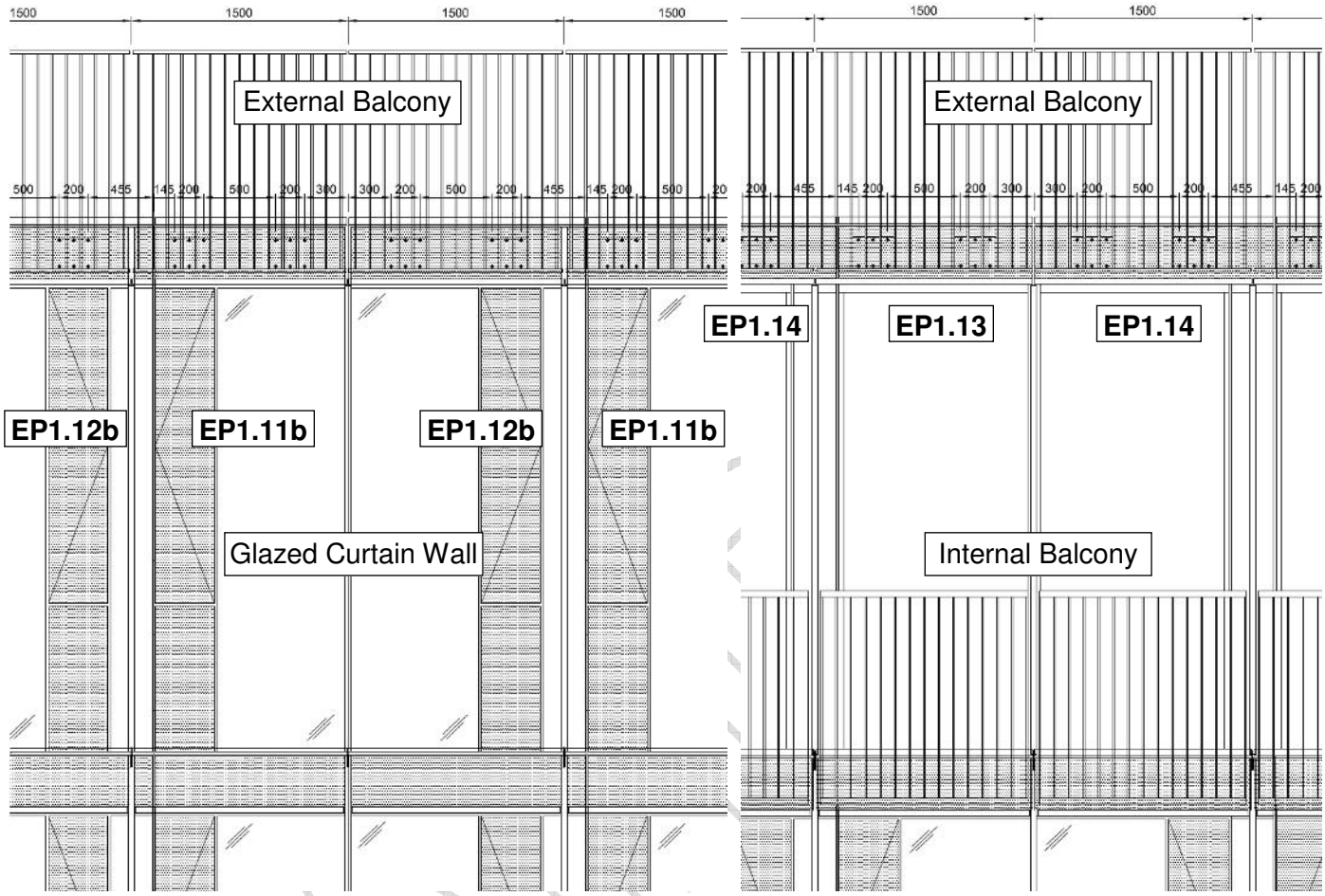

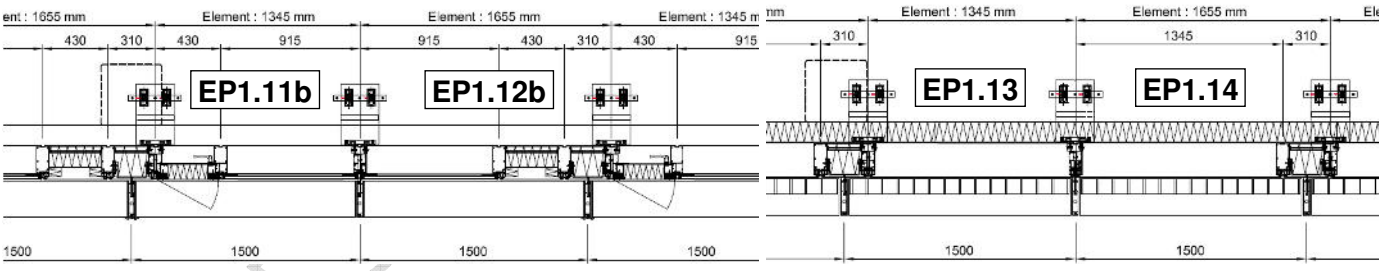

2.2 System profiles

2.2.1 Classification of cross-section

Effective section properties are calculated considering local buckling factors for class 4 cross-section parts acc. to the requirements of BS EN 1999-1-1.

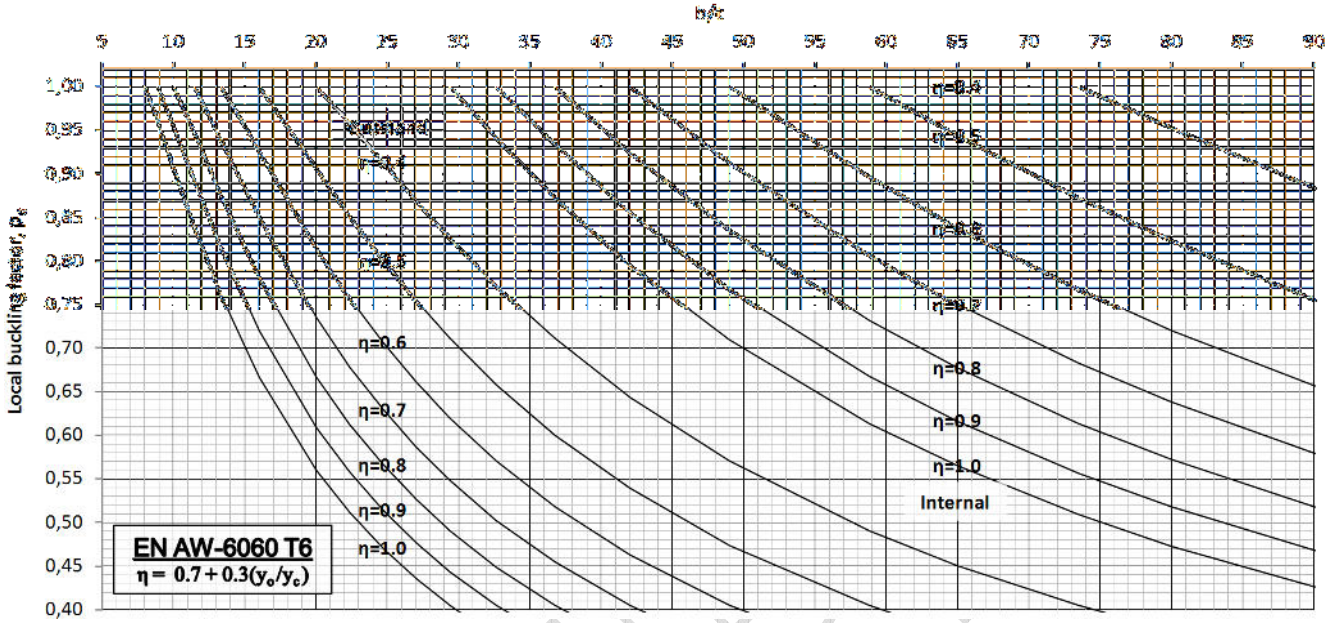

2.2.2 Split mullion, M1 & M1-cut

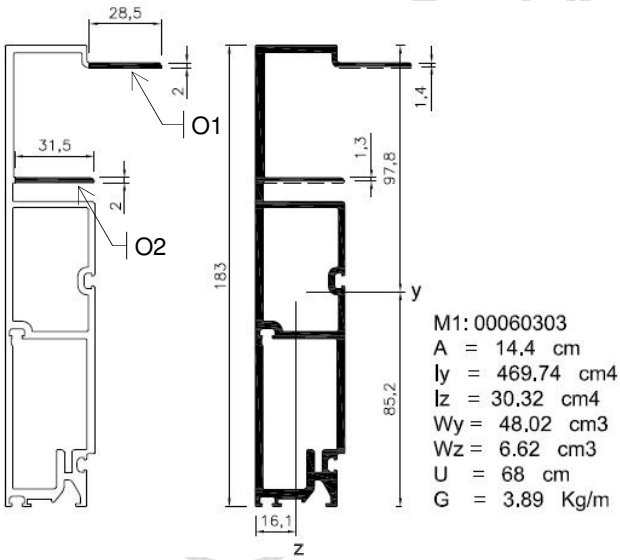

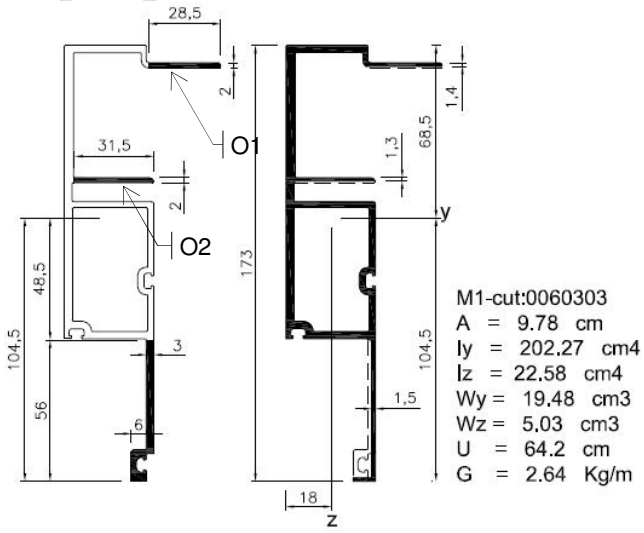

Outstand O1, η = 1.0:

b/t = 28.5/2.0 = *14.2*

local buckling factor, ρ_c = *0.73*

effective thickness, $t_e = 0.73 \cdot 2.0 =$ *1.4 mm*

Outstand O2, η = 1.0:

b/t = 31.5/2.0 = 15.8

local buckling factor, ρ_c = 0.67

effective thickness, t_e = 0.67·2.0 = 1.3 mm

2.2.3 Split mullion, M2 & M2-cut

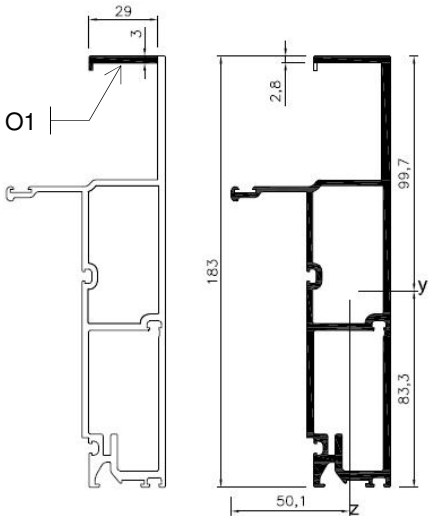

M2: 00060304
A = 14.38 cm
Iy = 434.76 cm4
Iz = 37.25 cm4
Wy = 43.67 cm3
Wz = 7.43 cm3
U = 62.6 cm
G = 3.88 Kg/m

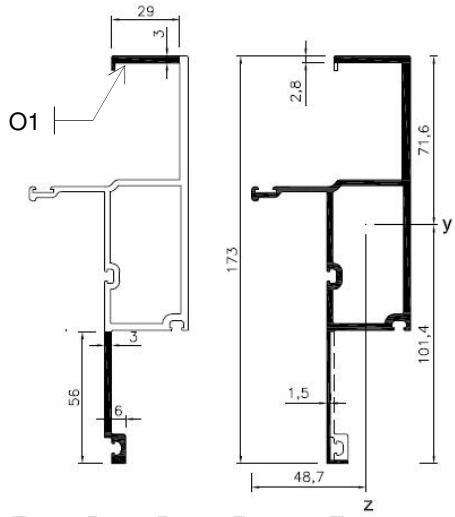

M2-cut: 00060304
A = 9.75 cm
Iy = 181.18 cm4
Iz = 29.11 cm4
Wy = 17.87 cm3
Wz = 5,98 cm3
U = 58.8 cm
G = 2.63 Kg/m

Outstand O1, η = 1.0:

b/t = 29.0/3.0 = 9.7

local buckling factor, ρ_c = 0.92

effective thickness, t_e = 0.92·3.0 = 2.8 mm

2.2.4 Reinforced mullions, M1+Reinf & M2+Reinf

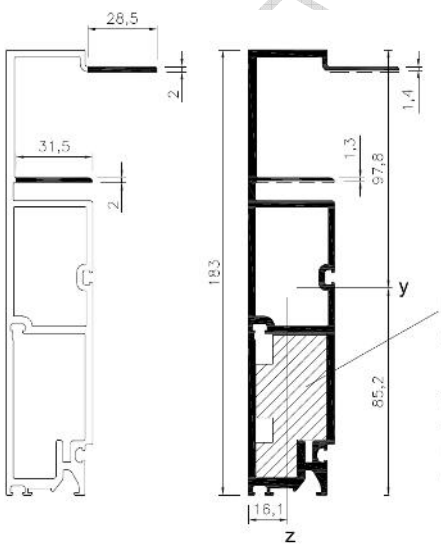

M1: 00060303
A = 14.4 cm
Iy = 469.74 cm4
Iz = 30.32 cm4
Wy = 48.02 cm3
Wz = 6.62 cm3

Reinf:
A = 13.56 cm
Iy = 33.47 cm4
Iz = 8.39 cm4
Wy = 10.7 cm3
Wz = 5.76 cm3
U = 18.8 cm
G = 3.66 Kg/m

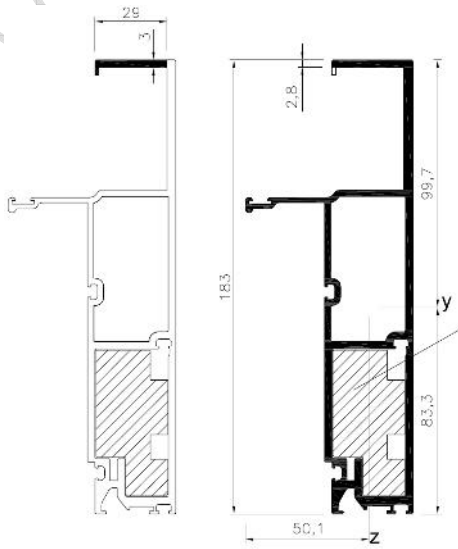

M2: 00060304
A = 14.38 cm
Iy = 434.76 cm4
Iz = 37.25 cm4
Wy = 43.67 cm3
Wz = 7.43 cm3

Reinf:
A = 13.56 cm
Iy = 33.47 cm4
Iz = 8.39 cm4
Wy = 10.7 cm3
Wz = 5.76 cm3
U = 18.8 cm
G = 3.66 Kg/m

2.2.5 Split-transom members, T1 & T2 [TD-151]

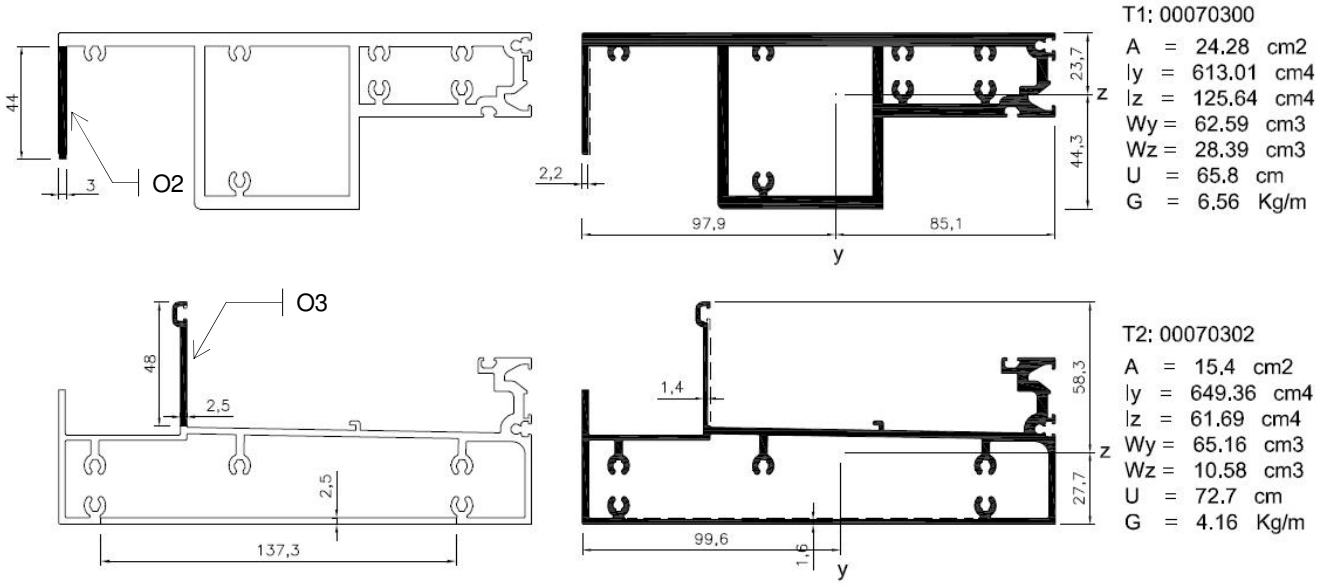

Outstand O2, η = 1.0:

b/t = 42.0/3.0 = *14.0*

local buckling factor, ρ_c = *0.73*

effective thickness, $t_e = 0.73 \cdot 3.0 =$ *2.2 mm*

Outstand O3, η = 1.0:

b/t = 48/2.5 = *19.2*

local buckling factor, ρ_c = *0.58*

effective thickness, $t_e = 0.58 \cdot 2.5 =$ *1.4 mm*

2.2.6 Intermediate transom, T3

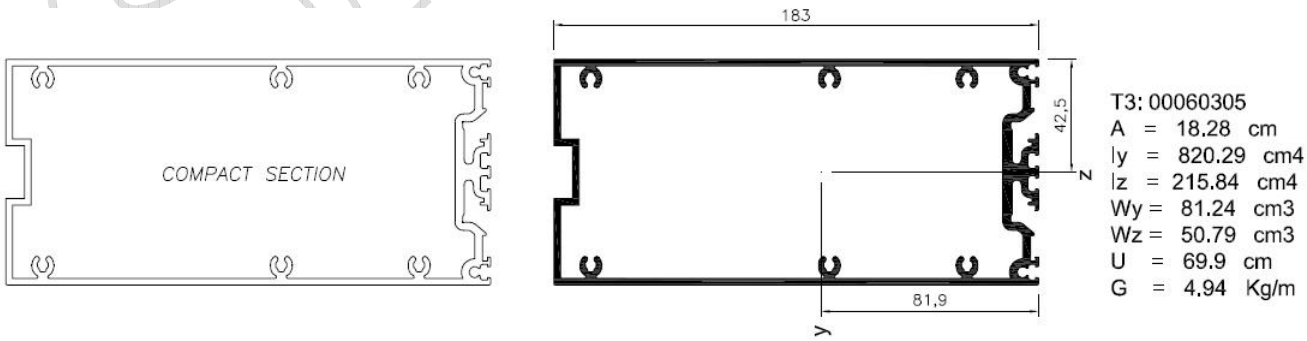

2.2.7 Reinforced transom, T3+Reinf

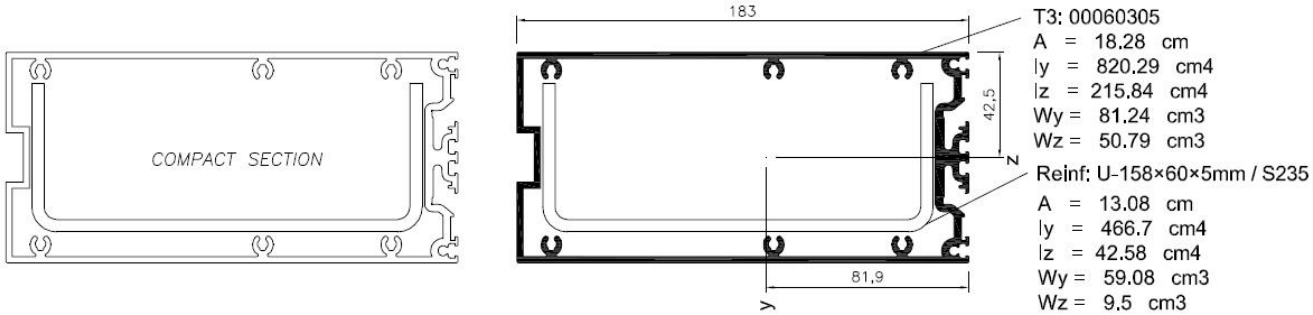

2.2.8 Intermediate transom, T4 & T4-cut

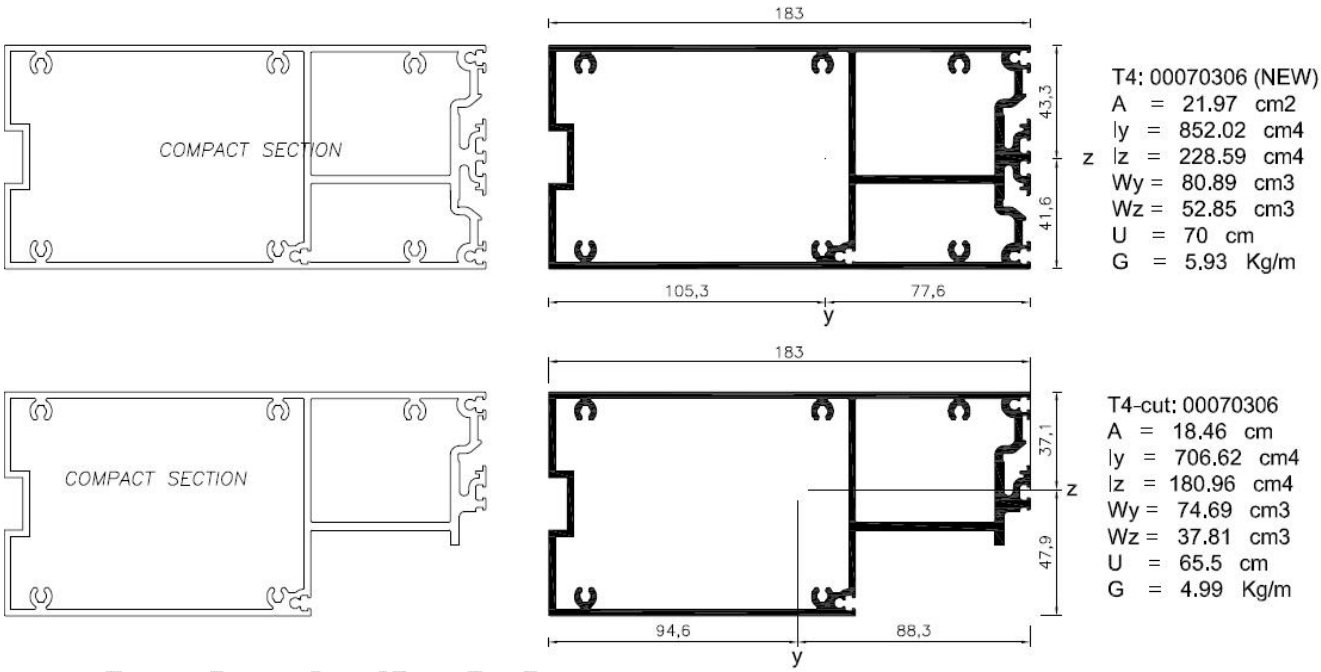

3 Typical Curtain Wall Element

3.1 Typical Element - EP1.12

Refer to Scia [13] structural analysis results in the following page (section 3.1.3).

3.1.1 Deflection check to CWCT 2.3.2 & 3.5.2

i Frontal deflection

Frontal, δ_{max}	=	5.2	mm	
Frontal, δ_{allow} = 3650/300 + 5	=	17.17	mm	**0.30 < 1.0**

ii In-plane deflection

Local, δ_{max}	=	0.5	mm	
In-plane, δ_{allow} = min{915/500; 3}	=	1.8	mm	**0.28 < 1.0**

3.1.2 Stress check to BS EN 1999-1-1

Maximum calculated Von Mises (or equivalent) stress in the members,

$\sigma_{max} = \sqrt{(\sigma^2_{normal} + 3\tau^2_{shear})}$ = 87.2 N/mm^2

EN AW-6060 T6

$\sigma_{el,Rd}$ = 1.0·140/1.1 = 127.27 N/mm^2 **0.68 < 1.0**

3.1.3 Structural analysis

NEMETSCHEK Scia	Project	Kings Cross Central, London
	Part	EP1.12 - Typical Element
	Description	1.665m x 3.65m - Standard bracket
	National code	EC - EN

1. Element Properties

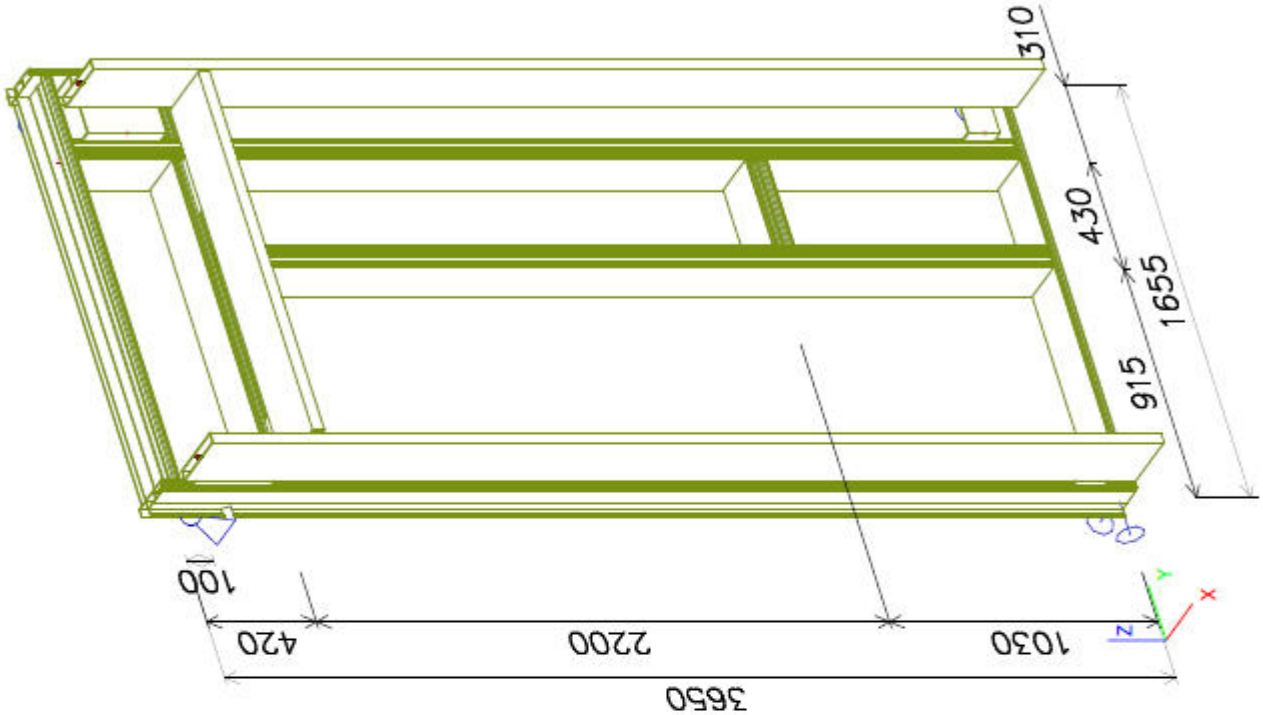

1.1. Member parameters

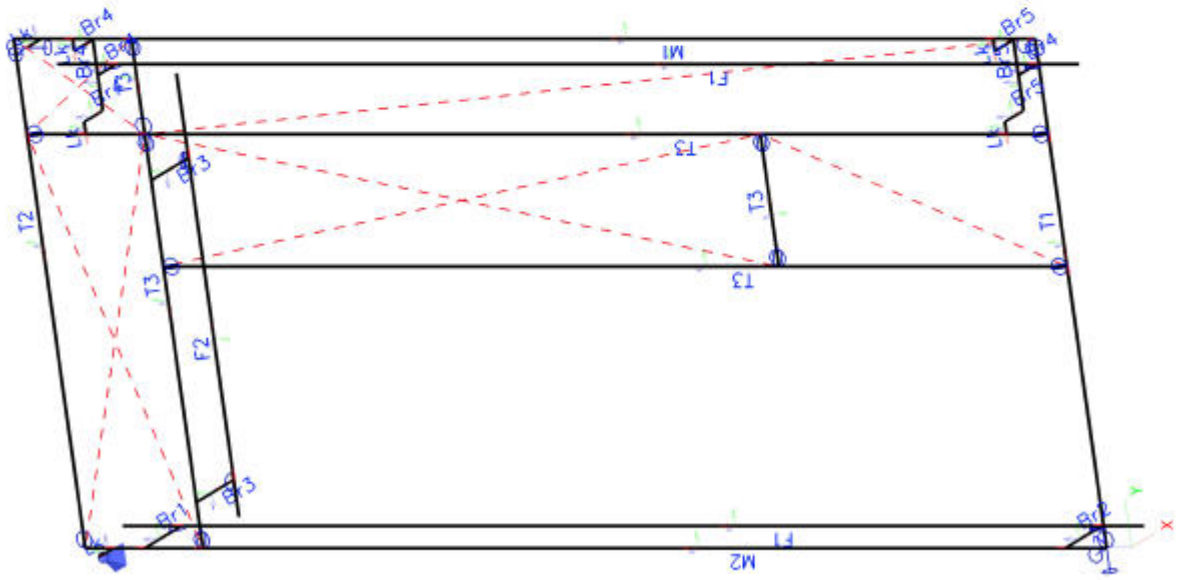

CASTLE
LETTENWEG 118, 4123 ALLSCHWIL, SWITZERLAND
TEL.: +41 (0)61 501 8210 / +41 (0)79 508 1651
REGISTERED IN SWITZERLAND | VAT REGISTRATION CHE-437.605.665

NEMETSCHEK Scia	Project	Kings Cross Central, London
	Part	EP1.12 - Typical Element
	Description	1.665m x 3.65m - Standard bracket
	National code	EC - EN

1.2. Cross-sections

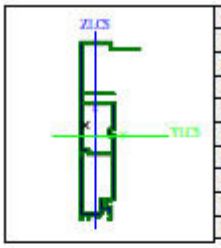

Name, Type	M1	CW 85
Item material, Fabrication	EN AW-6060 T6	extrusion
A [cm²]	14.40	
A y, z [cm²]	0.60	4.36
I y, z [cm⁴]	470.01	30.07
I YLCS, ZLCS [cm⁴]	469.77	30.31
I w [cm⁶], t [cm⁴]	1277.76	47.08
c YUCS, ZUCS [mm]	-16	85
Wel y, z [cm³]	47.88	6.28
Wpl y, z [cm³]	70.54	18.79

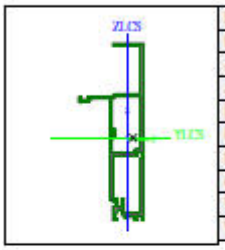

Name, Type	M2	CW 85
Item material, Fabrication	EN AW-6060 T6	extrusion
A [cm²]	14.37	
A y, z [cm²]	0.13	5.95
I y, z [cm⁴]	435.07	36.94
I YLCS, ZLCS [cm⁴]	434.79	37.22
I w [cm⁶], t [cm⁴]	560.26	51.47
c YUCS, ZUCS [mm]	15	83
Wel y, z [cm³]	43.52	7.21
Wpl y, z [cm³]	67.99	20.20

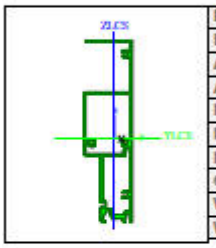

Name, Type	T1	CW 85
Item material, Fabrication	EN AW-6060 T6	extrusion
A [cm²]	15.02	
A y, z [cm²]	0.02	8.45
I y, z [cm⁴]	455.31	46.27
I YLCS, ZLCS [cm⁴]	455.28	46.30
I w [cm⁶], t [cm⁴]	856.13	65.96
c YUCS, ZUCS [mm]	13	83
Wel y, z [cm³]	45.67	14.53
Wpl y, z [cm³]	69.10	23.23

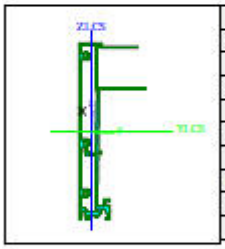

Name, Type	T2	CW 85
Item material, Fabrication	EN AW-6060 T6	extrusion
A [cm²]	14.88	
A y, z [cm²]	0.47	5.29
I y, z [cm⁴]	524.14	26.15
I YLCS, ZLCS [cm⁴]	523.86	26.43
I w [cm⁶], t [cm⁴]	748.43	25.08
c YUCS, ZUCS [mm]	5	-4
Wel y, z [cm³]	56.03	4.73
Wpl y, z [cm³]	77.50	15.83

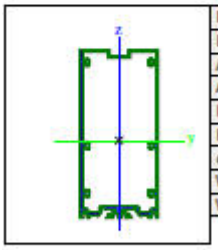

Name, Type	T3	CW 85
Item material, Fabrication	EN AW-6060 T6	extrusion
A [cm²]	18.26	
A y, z [cm²]	0.34	9.60
I y, z [cm⁴]	819.46	215.65
I w [cm⁶], t [cm⁴]	828.73	360.96
c YUCS, ZUCS [mm]	5	80
Wel y, z [cm³]	81.19	50.74
Wpl y, z [cm³]	109.27	57.85

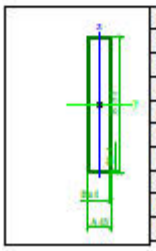

Name, Type	F1	O
Detailed	40; 4; 235; 4	
Item material, Fabrication	EN AW-6060 T6	general
A [cm²]	21.36	
A y, z [cm²]	3.23	16.95
I y, z [cm⁴]	1206.74	63.35
I w [cm⁶], t [cm⁴]	1746.60	193.60
c YUCS, ZUCS [mm]	20	117
Wel y, z [cm³]	102.70	31.67
Wpl y, z [cm³]	140.02	35.89

CASTLE
LETTENWEG 118, 4123 ALLSCHWIL, SWITZERLAND
TEL.: +41 (0)61 501 8210 / +41 (0)79 508 1651
REGISTERED IN SWITZERLAND | VAT REGISTRATION CHE-437.605.665

NEMETSCHEK Scia

Project	Kings Cross Central, London
Part	EP1.12 - Typical Element
Description	1.665m x 3.65m - Standard bracket
National code	EC - EN

Name, Type	F2	O
Detailed	45; 4; 235; 4	
Item material, Fabrication	EN AW-6060 T6	general
A [cm²]	21.76	
A y, z [cm²]	3.61	17.07
I y, z [cm⁴]	1260.10	82.63
I w [cm⁶], t [cm⁴]	2108.77	245.64
c YUCS, ZUCS [mm]	23	118
Wel y, z [cm³]	107.24	36.73
Wpl y, z [cm³]	144.64	41.28

Name, Type	Br1	Rectangle
Detailed	300; 8	
Item material, Fabrication	1.4301	general
A [cm²]	24.00	
A y, z [cm²]	20.00	20.00
I y, z [cm⁴]	1800.00	1.28
I w [cm⁶], t [cm⁴]	89.69	4.99
c YUCS, ZUCS [mm]	4	150
Wel y, z [cm³]	120.00	3.20
Wpl y, z [cm³]	180.00	4.80

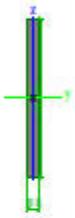

Name, Type	Br2	Rectangle
Detailed	120; 8	
Item material, Fabrication	1.4301	general
A [cm²]	9.60	
A y, z [cm²]	8.00	8.00
I y, z [cm⁴]	115.20	0.51
I w [cm⁶], t [cm⁴]	5.64	1.94
c YUCS, ZUCS [mm]	4	60
Wel y, z [cm³]	19.20	1.28
Wpl y, z [cm³]	28.80	1.92

Name, Type	Br3	Rectangle
Detailed	220; 8	
Item material, Fabrication	1.4301	general
A [cm²]	17.60	
A y, z [cm²]	14.67	14.67
I y, z [cm⁴]	709.87	0.94
I w [cm⁶], t [cm⁴]	35.27	3.63
c YUCS, ZUCS [mm]	4	110
Wel y, z [cm³]	64.53	2.35
Wpl y, z [cm³]	96.80	3.52

Name, Type	Br4	Rectangle
Detailed	300; 5	
Item material, Fabrication	EN AW-6005A T6	extrusion
A [cm²]	15.00	
A y, z [cm²]	12.51	12.50
I y, z [cm⁴]	1125.00	0.31
I w [cm⁶], t [cm⁴]	21.94	1.23
c YUCS, ZUCS [mm]	3	150
Wel y, z [cm³]	75.00	1.25
Wpl y, z [cm³]	112.50	1.87

Name, Type	Br5	Rectangle
Detailed	120; 5	
Item material, Fabrication	EN AW-6005A T6	extrusion
A [cm²]	6.00	
A y, z [cm²]	5.00	5.00
I y, z [cm⁴]	72.00	0.13
I w [cm⁶], t [cm⁴]	1.39	0.48
c YUCS, ZUCS [mm]	3	60
Wel y, z [cm³]	12.00	0.50
Wpl y, z [cm³]	18.00	0.75

Name, Detailed	Lk	Numerical
Material	Link	
Flexural buckling y-y, z-z	c	c

CASTLE
LETTENWEG 118, 4123 ALLSCHWIL, SWITZERLAND
TEL.: +41 (0)61 501 8210 / +41 (0)79 508 1651
REGISTERED IN SWITZERLAND | VAT REGISTRATION CHE-437.605.665

NEMETSCHEK Scia	Project	Kings Cross Central, London
	Part	EP1.12 - Typical Element
	Description	1.665m x 3.65m - Standard bracket
	National code	EC - EN

A [cm²]	100.00	
A y, z [cm²]	100.00	100.00
A L, D [m²/m]	1.0000e+00	0.0000e+00
c YUCS, ZUCS [mm]	1	1
α [deg]	0.00	
I y, z [cm⁴]	1000.00	100.00
i y, z [mm]	32	10
Wel y, z [cm³]	100.00	100.00
Wpl y, z [cm³]	100.00	100.00
Mply +, - [Ncm]	0.00	0.00
Mplz +, - [Ncm]	0.00	0.00
d y, z [mm]	1	1
I t [cm⁴], w [cm⁶]	100.00	0.00
β y, z [mm]	-2	-2

2. Loads [kN, kN/m]

2.1. LC1, Dead load

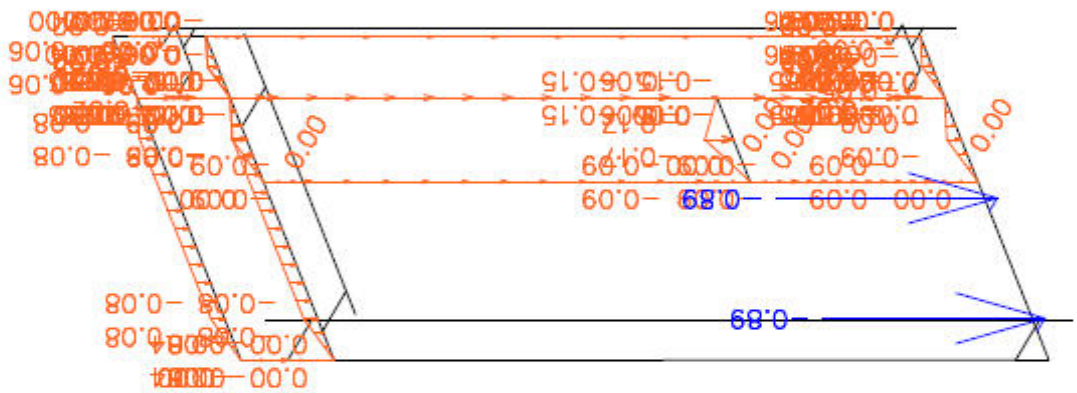

2.2. LC2, Wind pressure

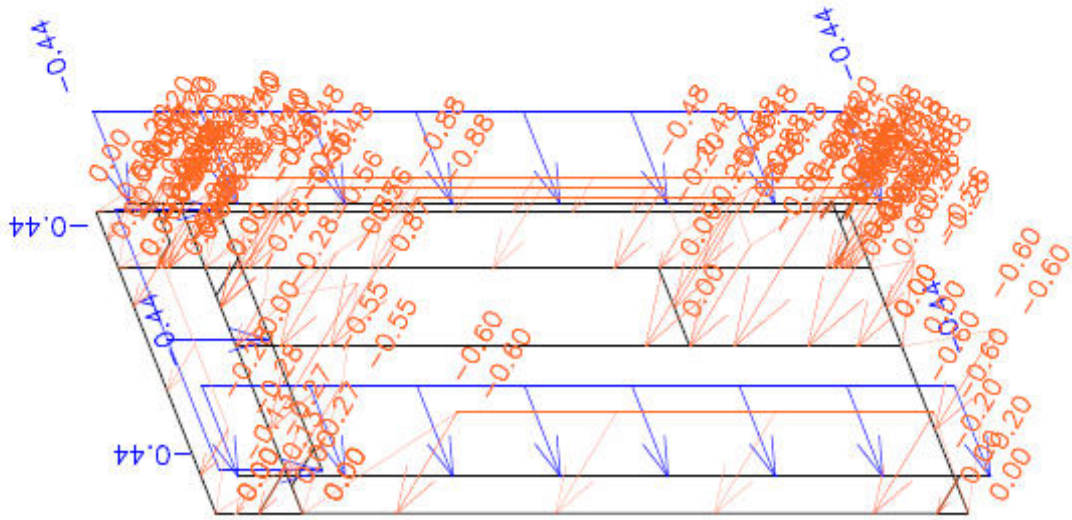

CASTLE
LETTENWEG 118, 4123 ALLSCHWIL, SWITZERLAND
TEL.: +41 (0)61 501 8210 / +41 (0)79 508 1651
REGISTERED IN SWITZERLAND | VAT REGISTRATION CHE-437.605.665

NEMETSCHEK Scia	Project	Kings Cross Central, London
	Part	EP1.12 - Typical Element
	Description	1.665m x 3.65m - Standard bracket
	National code	EC - EN

2.3. LC3, Wind suction

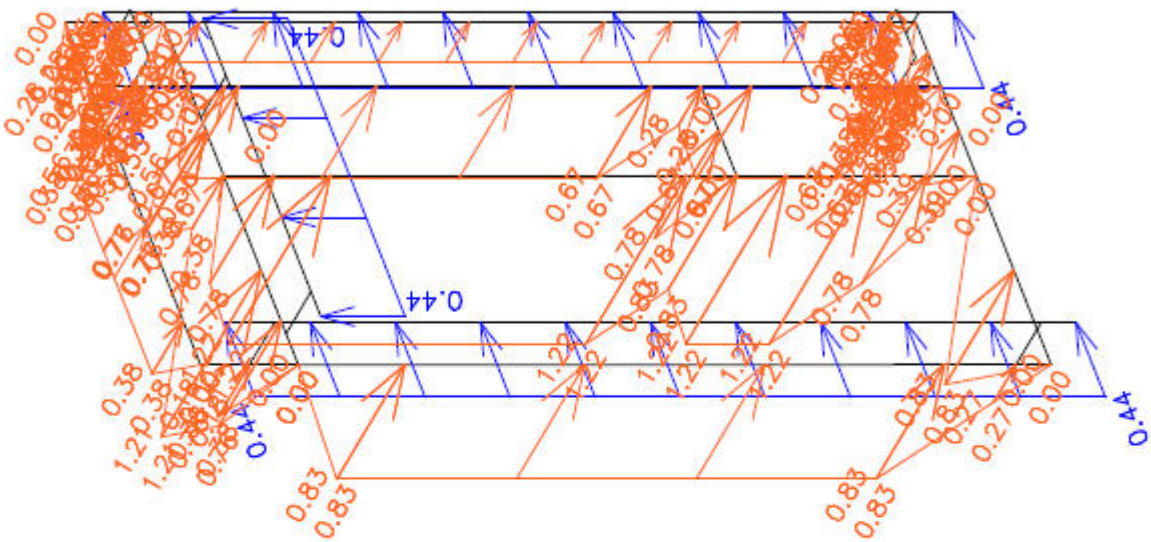

2.4. LC4, Imposed/live load

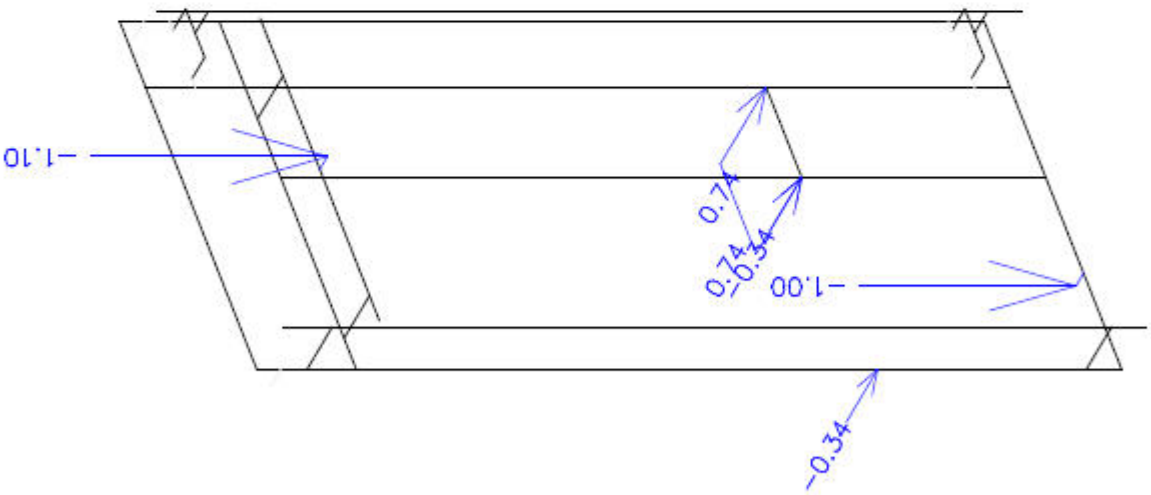

2.5. Load Combinations

Name	Description	Type	Load cases	Coeff. [-]
CO100	(D)	Linear - serviceability	LC0 - Selfweight	1.10
			LC1 - D - Dead load	1.00
CO101	(D) + (Wp)	Linear -	LC0 - Selfweight	1.10
			LC1 - D - Dead load	1.00

CASTLE
LETTENWEG 118, 4123 ALLSCHWIL, SWITZERLAND
TEL.: +41 (0)61 501 8210 / +41 (0)79 508 1651
REGISTERED IN SWITZERLAND | VAT REGISTRATION CHE-437.605.665

NEMETSCHEK Scia	Project	Kings Cross Central, London
	Part	EP1.12 - Typical Element
	Description	1.665m x 3.65m - Standard bracket
	National code	EC - EN

Name	Description	Type	Load cases	Coeff. [-]
CO101	(D) + (Wp)	Linear - serviceability	LC2 - Wp - Wind load pressure	1.00
CO102	(D) + (Ws)	Linear - serviceability	LC0 - Selfweight	1.10
			LC1 - D - Dead load	1.00
			LC3 - Ws - Wind load suction	1.00
CO103	(D) + (L)	Linear - serviceability	LC0 - Selfweight	1.10
			LC1 - D - Dead load	1.00
			LC4 - L - Imposed/Live Load	1.00
CO200	1.35(D)	Linear - ultimate	LC0 - Selfweight	1.50
			LC1 - D - Dead load	1.35
CO201	1.35(D) + 1.5(Wp)	Linear - ultimate	LC0 - Selfweight	1.50
			LC1 - D - Dead load	1.35
			LC2 - Wp - Wind load pressure	1.50
CO202	1.35(D) + 1.5(Ws)	Linear - ultimate	LC0 - Selfweight	1.50
			LC1 - D - Dead load	1.35
			LC3 - Ws - Wind load suction	1.50
CO203	1.35(D) + 1.5(L)	Linear - ultimate	LC0 - Selfweight	1.50
			LC1 - D - Dead load	1.35
			LC4 - L - Imposed/Live Load	1.50

2.6. Calculation protocol

Calculation protocol

Linear calculation

Number of 2D elements	0
Number of 1D elements	57
Number of mesh nodes	47
Number of equations	282
Loadcases	LC0
	LC1
	LC2
	LC4
	LC3
Bending theory	Mindlin
Start of calculation	30.03.2015 18:58
End of calculation	30.03.2015 18:58

Sum of loads and reactions.

	[kN]	X	Y	Z
Loadcase LC0	loads	0.0	0.0	-1.5
	reactions in nodes	0.0	0.0	1.5
	reactions on lines	0.0	0.0	0.0
	contact 1D	0.0	0.0	0.0
	contact 2D	0.0	0.0	0.0
Loadcase LC1	loads	0.0	0.0	-3.0
	reactions in nodes	0.0	0.0	3.0
	reactions on lines	0.0	0.0	0.0
	contact 1D	0.0	0.0	0.0
	contact 2D	0.0	0.0	0.0
Loadcase LC2	loads	-7.9	-3.2	-0.6
	reactions in nodes	7.9	3.2	0.6
	reactions on lines	0.0	0.0	0.0
	contact 1D	0.0	0.0	0.0
	contact 2D	0.0	0.0	0.0
Loadcase LC4	loads	1.0	0.0	-2.1
	reactions in nodes	-1.0	0.0	2.1
	reactions on lines	0.0	0.0	0.0
	contact 1D	0.0	0.0	0.0
	contact 2D	0.0	0.0	0.0
Loadcase LC3	loads	10.9	3.2	0.6
	reactions in nodes	-10.9	-3.2	-0.6
	reactions on lines	0.0	0.0	0.0
	contact 1D	0.0	0.0	0.0
	contact 2D	0.0	0.0	0.0

CASTLE
LETTENWEG 118, 4123 ALLSCHWIL, SWITZERLAND
TEL.: +41 (0)61 501 8210 / +41 (0)79 508 1651
REGISTERED IN SWITZERLAND | VAT REGISTRATION CHE-437.605.665

NEMETSCHEK Scia	Project	Kings Cross Central, London
	Part	EP1.12 - Typical Element
	Description	1.665m x 3.65m - Standard bracket
	National code	EC - EN

3. Element Deformation [mm]

3.1. Element Deformation: CO101

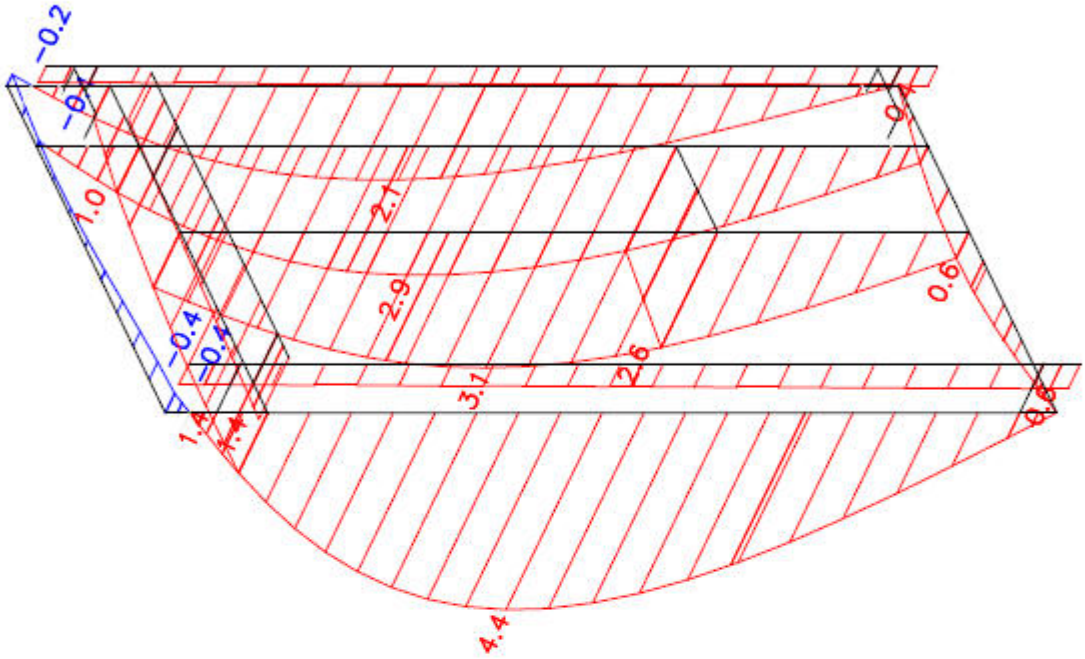

3.2. Element Deformation: CO102

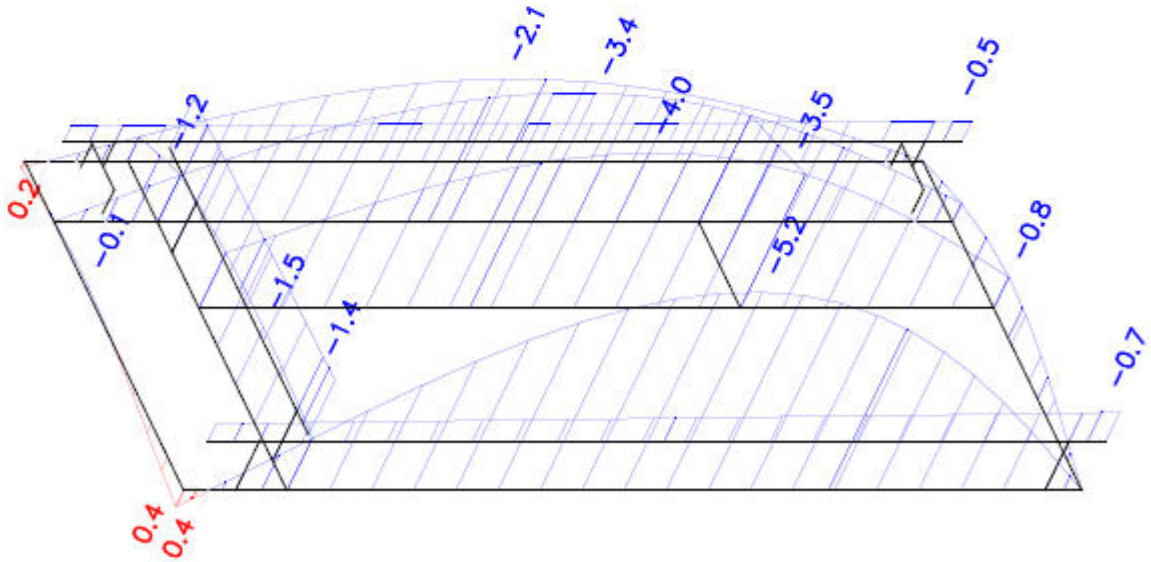

LETTENWEG 118, 4123 ALLSCHWIL, SWITZERLAND
TEL.: +41 (0)61 501 8210 / +41 (0)79 508 1651
REGISTERED IN SWITZERLAND | VAT REGISTRATION CHE-437.605.665

NEMETSCHEK Scia	Project	Kings Cross Central, London
	Part	EP1.12 - Typical Element
	Description	1.665m x 3.65m - Standard bracket
	National code	EC - EN

3.3. Element Deformation: CO103

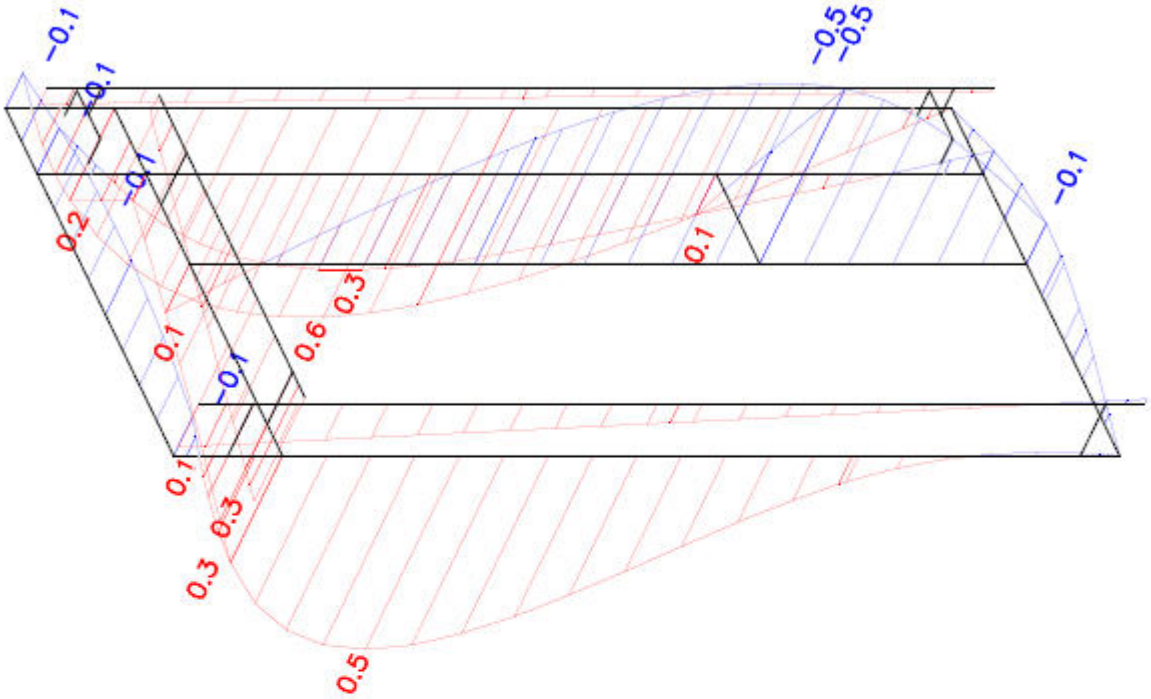

3.4. Relative deformation: CO103

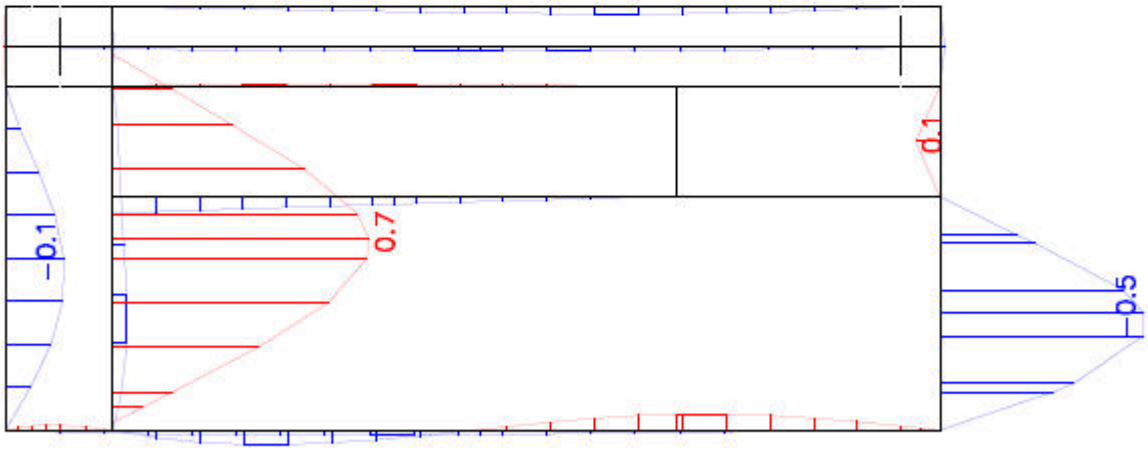

CASTLE
LETTENWEG 118, 4123 ALLSCHWIL, SWITZERLAND
TEL.: +41 (0)61 501 8210 / +41 (0)79 508 1651
REGISTERED IN SWITZERLAND | VAT REGISTRATION CHE-437.605.665

NEMETSCHEK Scia	Project	Kings Cross Central, London
	Part	EP1.12 - Typical Element
	Description	1.665m x 3.65m - Standard bracket
	National code	EC - EN

4. Stresses [N/mm²]

4.1. Stress: C0201

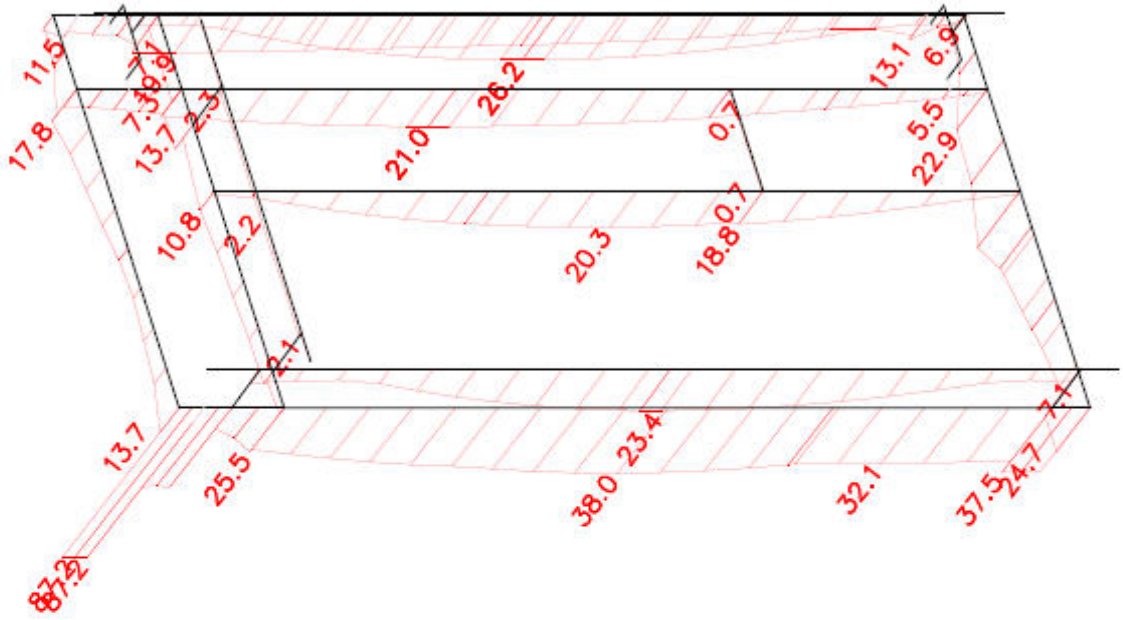

4.2. Stress: C0202

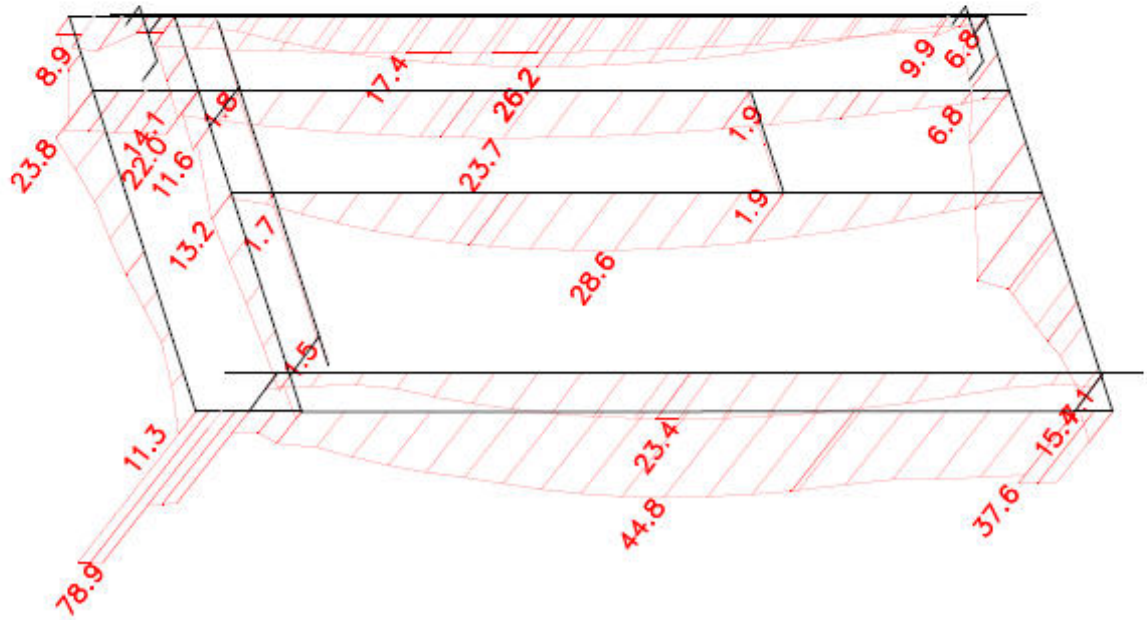

CASTLE
LETTENWEG 118, 4123 ALLSCHWIL, SWITZERLAND
TEL.: +41 (0)61 501 8210 / +41 (0)79 508 1651
REGISTERED IN SWITZERLAND | VAT REGISTRATION CHE-437.605.665

NEMETSCHEK Scia	Project	Kings Cross Central, London
	Part	EP1.12 - Typical Element
	Description	1.665m x 3.65m - Standard bracket
	National code	EC - EN

4.3. Stress: C0203

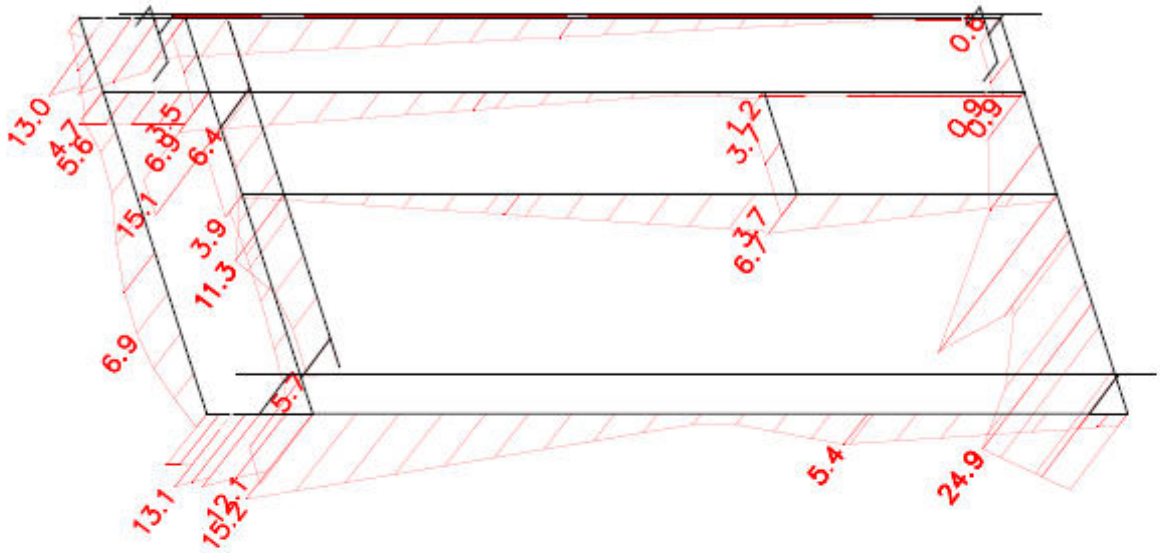

5. Factored Reaction Forces [kN]

5.1. Reactions: CO201

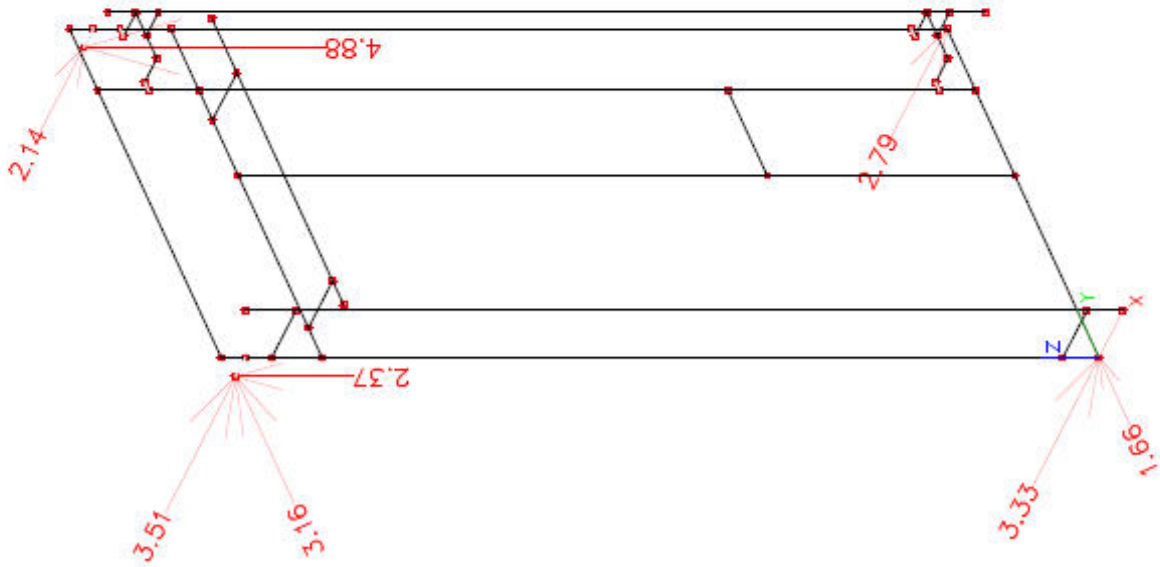

CASTLE
LETTENWEG 118, 4123 ALLSCHWIL, SWITZERLAND
TEL.: +41 (0)61 501 8210 / +41 (0)79 508 1651
REGISTERED IN SWITZERLAND | VAT REGISTRATION CHE-437.605.665

NEMETSCHEK Scia	Project	Kings Cross Central, London
	Part	EP1.12 - Typical Element
	Description	1.665m x 3.65m - Standard bracket
	National code	EC - EN

5.2. Reactions: CO202

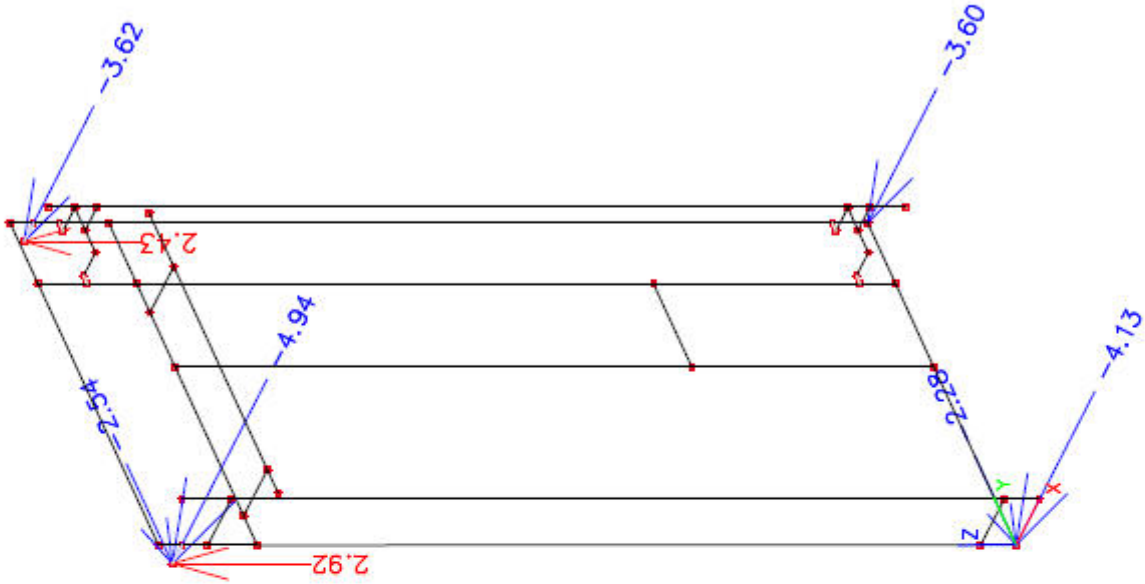

5.3. Reactions: CO203

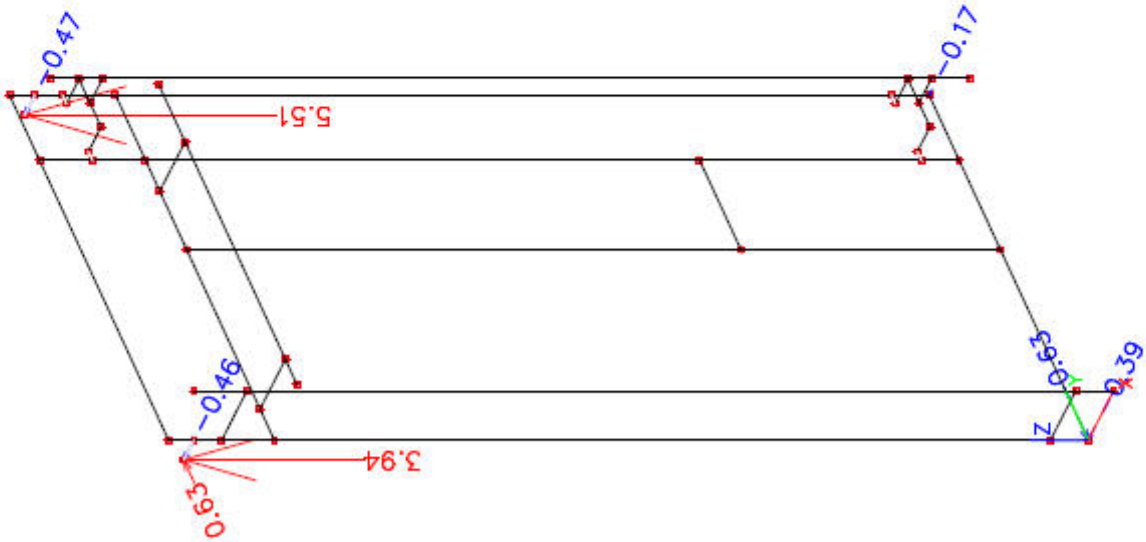

LETTENWEG 118, 4123 ALLSCHWIL, SWITZERLAND
TEL.: +41 (0)61 501 8210 / +41 (0)79 508 1651
REGISTERED IN SWITZERLAND | VAT REGISTRATION CHE-437.605.665

3.2 Typical Element - EP1.12a

Refer to Scia [13] structural analysis results in the following page (section 3.2.3).

3.2.1 Deflection check to CWCT 2.3.2 & 3.5.2

i Frontal deflection

Frontal, δ_{max}	=	*4.8*	*mm*	
Frontal, δ_{allow} = 3650/300 + 5	=	*17.17*	*mm*	***0.28 < 1.0***

ii In-plane deflection

Local, δ_{max}	=	*0.6*	*mm*	
In-plane, δ_{allow} = min{915/500; 3} =		*1.8*	*mm*	***0.33 < 1.0***

3.2.2 Stress check to BS EN 1999-1-1

Maximum calculated Von Mises (or equivalent) stress in the members,

$\sigma_{max} = \sqrt{(\sigma^2_{normal} + 3\tau^2_{shear})}$ = 82.6 N/mm^2

EN AW-6060 T6

$\sigma_{el,Rd} = 1.0 \cdot 140/1.1$ = 127.27 N/mm^2 ***0.65 < 1.0***

3.2.3 Structural analysis

NEMETSCHEK Scia	Project	Kings Cross Central, London
	Part	EP1.12a - Typical Element
	Description	1.665m x 3.65m - Offset bracket
	National code	EC - EN

1. Element Properties

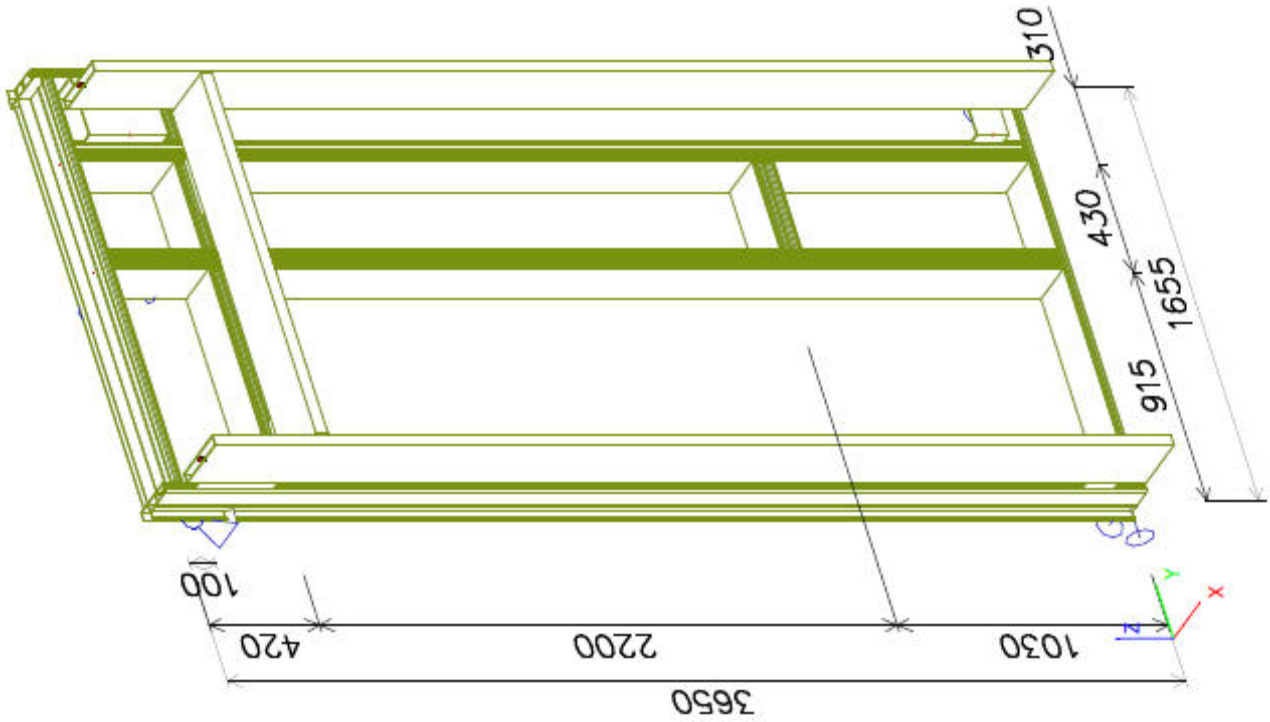

1.1. Member parameters

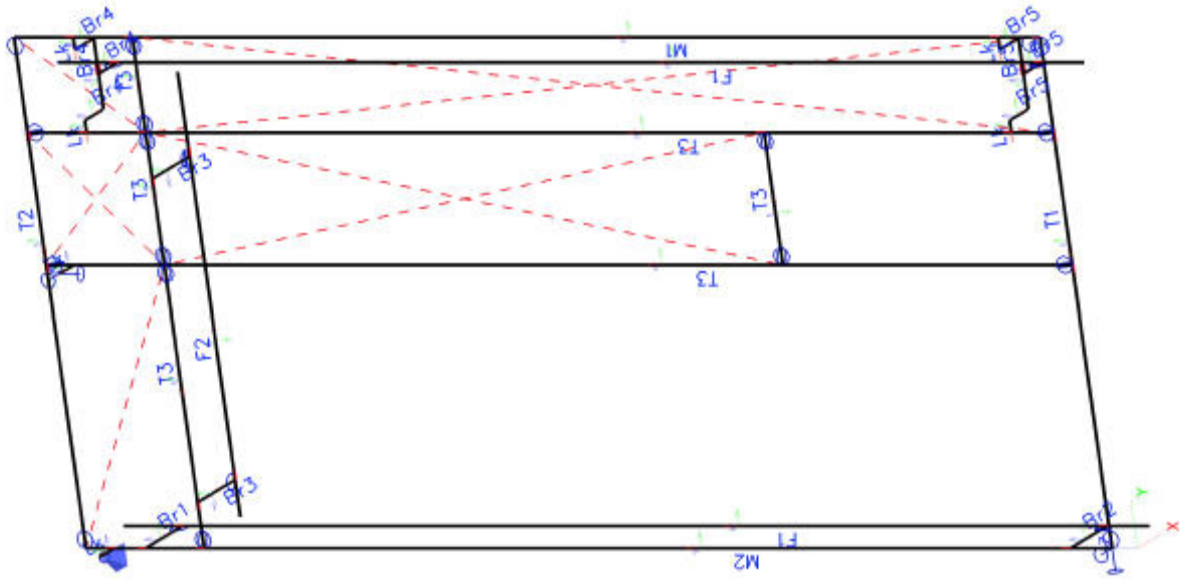

CASTLE
LETTENWEG 118, 4123 ALLSCHWIL, SWITZERLAND
TEL.: +41 (0)61 501 8210 / +41 (0)79 508 1651
REGISTERED IN SWITZERLAND | VAT REGISTRATION CHE-437.605.665

NEMETSCHEK Scia	Project	Kings Cross Central, London
	Part	EP1.12a - Typical Element
	Description	1.665m x 3.65m - Offset bracket
	National code	EC - EN

1.2. Cross-sections

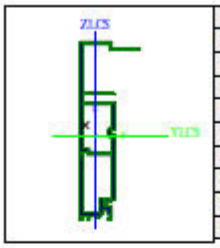

Name, Type	M1	CW 85
Item material, Fabrication	EN AW-6060 T6	extrusion
A [cm²]	14.40	
A y, z [cm²]	0.60	4.36
I y, z [cm⁴]	470.01	30.07
I YLCS, ZLCS [cm⁴]	469.77	30.31
I w [cm⁶], t [cm⁴]	1277.76	47.08
c YUCS, ZUCS [mm]	-16	85
Wel y, z [cm³]	47.88	6.28
Wpl y, z [cm³]	70.54	18.79

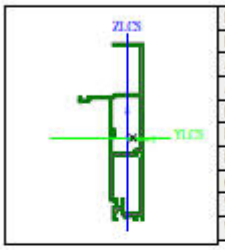

Name, Type	M2	CW 85
Item material, Fabrication	EN AW-6060 T6	extrusion
A [cm²]	14.37	
A y, z [cm²]	0.13	5.95
I y, z [cm⁴]	435.07	36.94
I YLCS, ZLCS [cm⁴]	434.79	37.22
I w [cm⁶], t [cm⁴]	560.26	51.47
c YUCS, ZUCS [mm]	15	83
Wel y, z [cm³]	43.52	7.21
Wpl y, z [cm³]	67.99	20.20

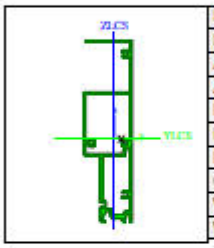

Name, Type	T1	CW 85
Item material, Fabrication	EN AW-6060 T6	extrusion
A [cm²]	15.02	
A y, z [cm²]	0.02	8.45
I y, z [cm⁴]	455.31	46.27
I YLCS, ZLCS [cm⁴]	455.28	46.30
I w [cm⁶], t [cm⁴]	856.13	65.96
c YUCS, ZUCS [mm]	13	83
Wel y, z [cm³]	45.67	14.53
Wpl y, z [cm³]	69.10	23.23

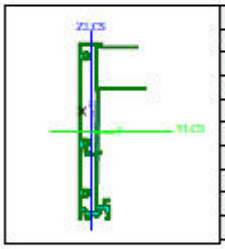

Name, Type	T2	CW 85
Item material, Fabrication	EN AW-6060 T6	extrusion
A [cm²]	14.88	
A y, z [cm²]	0.47	5.29
I y, z [cm⁴]	524.14	26.15
I YLCS, ZLCS [cm⁴]	523.86	26.43
I w [cm⁶], t [cm⁴]	748.43	25.08
c YUCS, ZUCS [mm]	5	-4
Wel y, z [cm³]	56.03	4.73
Wpl y, z [cm³]	77.50	15.83

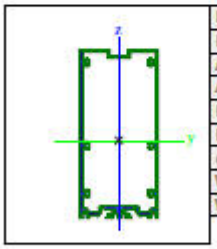

Name, Type	T3	CW 85
Item material, Fabrication	EN AW-6060 T6	extrusion
A [cm²]	18.26	
A y, z [cm²]	0.34	9.60
I y, z [cm⁴]	819.46	215.65
I w [cm⁶], t [cm⁴]	828.73	360.96
c YUCS, ZUCS [mm]	5	80
Wel y, z [cm³]	81.19	50.74
Wpl y, z [cm³]	109.27	57.85

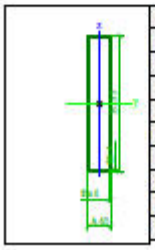

Name, Type	F1	O
Detailed	40; 4; 235; 4	
Item material, Fabrication	EN AW-6060 T6	general
A [cm²]	21.36	
A y, z [cm²]	3.23	16.95
I y, z [cm⁴]	1206.74	63.35
I w [cm⁶], t [cm⁴]	1746.60	193.60
c YUCS, ZUCS [mm]	20	117
Wel y, z [cm³]	102.70	31.67
Wpl y, z [cm³]	140.02	35.89

CASTLE
LETTENWEG 118, 4123 ALLSCHWIL, SWITZERLAND
TEL.: +41 (0)61 501 8210 / +41 (0)79 508 1651
REGISTERED IN SWITZERLAND | VAT REGISTRATION CHE-437.605.665

NEMETSCHEK Scia

Project	Kings Cross Central, London
Part	EP1.12a - Typical Element
Description	1.665m x 3.65m - Offset bracket
National code	EC - EN

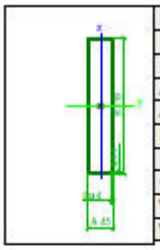

Name, Type	F2	O
Detailed	45; 4; 235; 4	
Item material, Fabrication	EN AW-6060 T6	general
A [cm²]	21.76	
A y, z [cm²]	3.61	17.07
I y, z [cm⁴]	1260.10	82.63
I w [cm⁶], t [cm⁴]	2108.77	245.64
c YUCS, ZUCS [mm]	23	118
Wel y, z [cm³]	107.24	36.73
Wpl y, z [cm³]	144.64	41.28

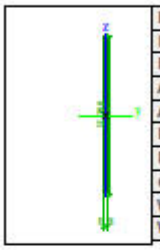

Name, Type	Br1	Rectangle
Detailed	300; 8	
Item material, Fabrication	1.4301	general
A [cm²]	24.00	
A y, z [cm²]	20.00	20.00
I y, z [cm⁴]	1800.00	1.28
I w [cm⁶], t [cm⁴]	89.69	4.99
c YUCS, ZUCS [mm]	4	150
Wel y, z [cm³]	120.00	3.20
Wpl y, z [cm³]	180.00	4.80

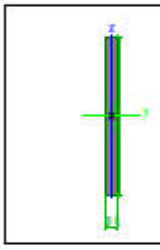

Name, Type	Br2	Rectangle
Detailed	120; 8	
Item material, Fabrication	1.4301	general
A [cm²]	9.60	
A y, z [cm²]	8.00	8.00
I y, z [cm⁴]	115.20	0.51
I w [cm⁶], t [cm⁴]	5.64	1.94
c YUCS, ZUCS [mm]	4	60
Wel y, z [cm³]	19.20	1.28
Wpl y, z [cm³]	28.80	1.92

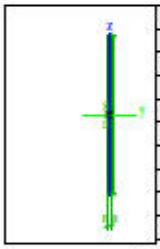

Name, Type	Br3	Rectangle
Detailed	220; 8	
Item material, Fabrication	1.4301	general
A [cm²]	17.60	
A y, z [cm²]	14.67	14.67
I y, z [cm⁴]	709.87	0.94
I w [cm⁶], t [cm⁴]	35.27	3.63
c YUCS, ZUCS [mm]	4	110
Wel y, z [cm³]	64.53	2.35
Wpl y, z [cm³]	96.80	3.52

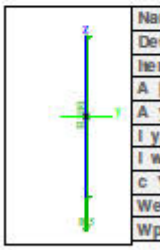

Name, Type	Br4	Rectangle
Detailed	300; 5	
Item material, Fabrication	EN AW-6005A T6	general
A [cm²]	15.00	
A y, z [cm²]	12.51	12.50
I y, z [cm⁴]	1125.00	0.31
I w [cm⁶], t [cm⁴]	21.94	1.23
c YUCS, ZUCS [mm]	3	150
Wel y, z [cm³]	75.00	1.25
Wpl y, z [cm³]	112.50	1.87

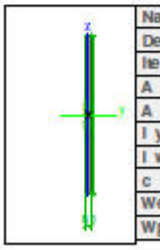

Name, Type	Br5	Rectangle
Detailed	120; 5	
Item material, Fabrication	EN AW-6005A T6	general
A [cm²]	6.00	
A y, z [cm²]	5.00	5.00
I y, z [cm⁴]	72.00	0.13
I w [cm⁶], t [cm⁴]	1.39	0.48
c YUCS, ZUCS [mm]	3	60
Wel y, z [cm³]	12.00	0.50
Wpl y, z [cm³]	18.00	0.75

Name, Detailed	Lk	Numerical
Material	Link	
Flexural buckling y-y, z-z	c	c

CASTLE
LETTENWEG 118, 4123 ALLSCHWIL, SWITZERLAND
TEL.: +41 (0)61 501 8210 / +41 (0)79 508 1651
REGISTERED IN SWITZERLAND | VAT REGISTRATION CHE-437.605.665

NEMETSCHEK Scia	Project	Kings Cross Central, London
	Part	EP1.12a - Typical Element
	Description	1.665m x 3.65m - Offset bracket
	National code	EC - EN

A [cm²]	10.00	
A y, z [cm²]	0.01	0.01
A L, D [m²/m]	1.0000e+00	0.0000e+00
c YUCS, ZUCS [mm]	1	1
α [deg]	0.00	
I y, z [cm⁴]	100.00	100.00
i y, z [mm]	32	32
Wel y, z [cm³]	100.00	100.00
Wpl y, z [cm³]	100.00	100.00
Mply +, - [Ncm]	0.00	0.00
Mplz +, - [Ncm]	0.00	0.00
d y, z [mm]	1	1
I t [cm⁴], w [cm⁶]	100.00	0.00
β y, z [mm]	-2	-2

2. Loads [kN, kN/m]

2.1. LC1, Dead load

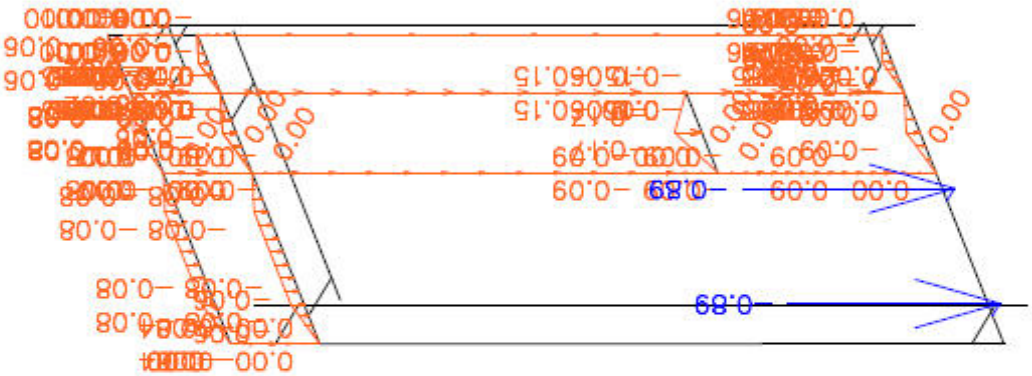

2.2. LC2, Wind pressure

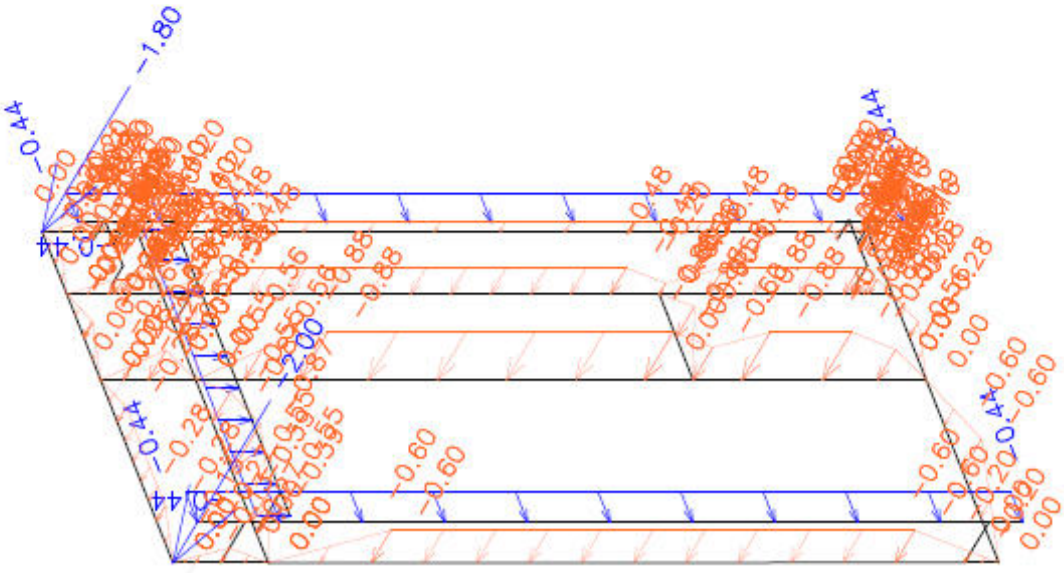

CASTLE
LETTENWEG 118, 4123 ALLSCHWIL, SWITZERLAND
TEL.: +41 (0)61 501 8210 / +41 (0)79 508 1651
REGISTERED IN SWITZERLAND | VAT REGISTRATION CHE-437.605.665

2.3. LC3, Wind suction

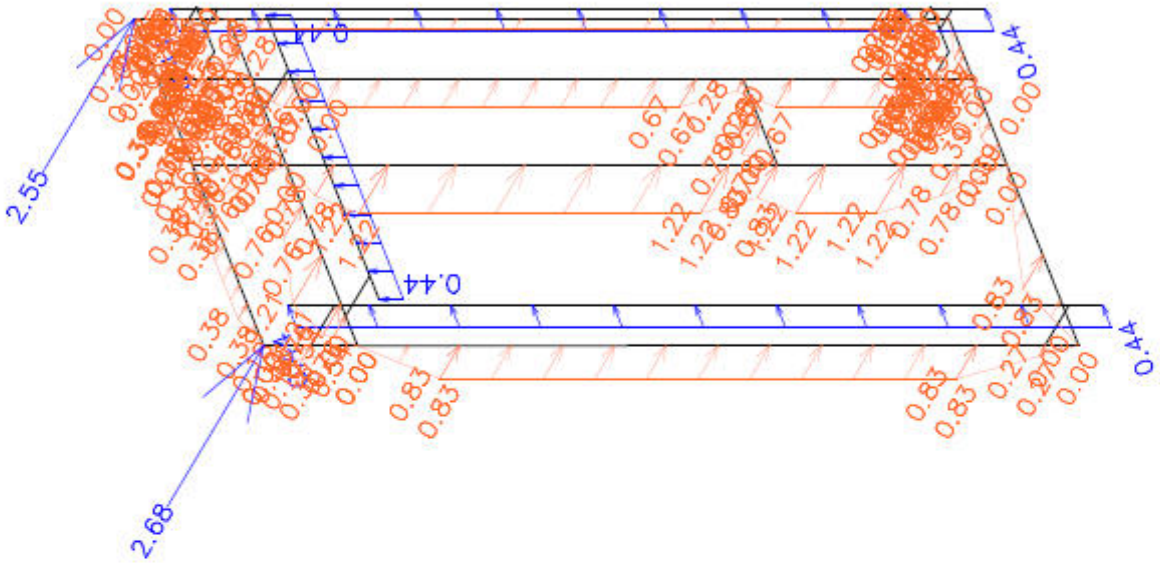

2.4. LC4, Imposed/live load

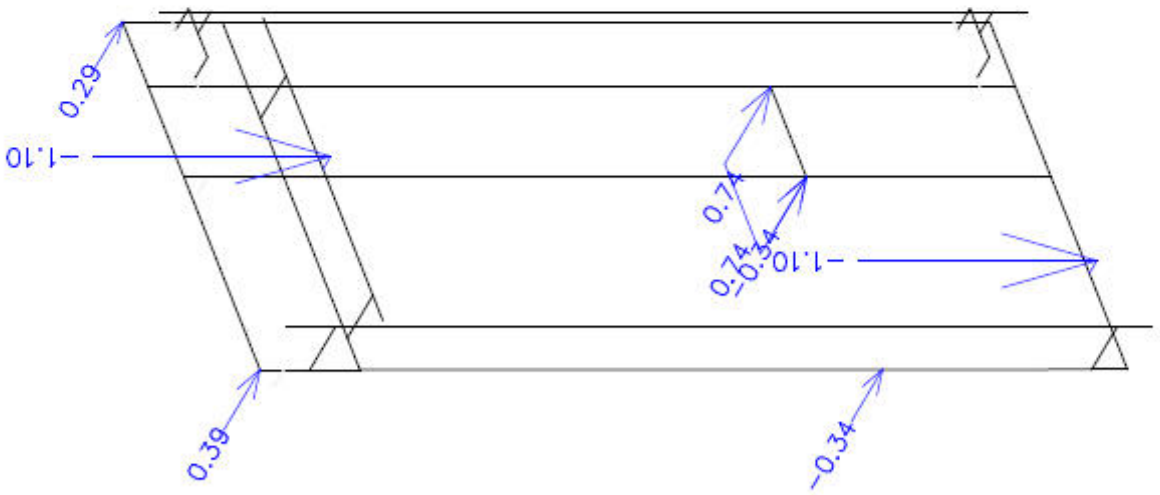

2.5. Load Combinations

Name	Description	Type	Load cases	Coeff. [-]
CO100	(D)	Linear - serviceability	LC0 - Selfweight	1.10
			LC1 - D - Dead load	1.00
CO101	(D) + (Wp)	Linear -	LC0 - Selfweight	1.10

CASTLE
LETTENWEG 118, 4123 ALLSCHWIL, SWITZERLAND
TEL.: +41 (0)61 501 8210 / +41 (0)79 508 1651
REGISTERED IN SWITZERLAND | VAT REGISTRATION CHE-437.605.665

NEMETSCHEK Scia	Project	Kings Cross Central, London
	Part	EP1.12a - Typical Element
	Description	1.665m x 3.65m - Offset bracket
	National code	EC - EN

Name	Description	Type	Load cases	Coeff. [-]
CO101	(D) + (Wp)	Linear - serviceability	LC1 - D - Dead load	1.00
			LC2 - Wp - Wind load pressure	1.00
CO102	(D) + (Ws)	Linear - serviceability	LC0 - Selfweight	1.10
			LC1 - D - Dead load	1.00
			LC3 - Ws - Wind load suction	1.00
CO103	(D) + (L)	Linear - serviceability	LC0 - Selfweight	1.10
			LC1 - D - Dead load	1.00
			LC4 - L - Imposed/Live Load	1.00
CO200	1.35(D)	Linear - ultimate	LC0 - Selfweight	1.50
			LC1 - D - Dead load	1.35
CO201	1.35(D) + 1.5(Wp)	Linear - ultimate	LC0 - Selfweight	1.50
			LC1 - D - Dead load	1.35
			LC2 - Wp - Wind load pressure	1.50
CO202	1.35(D) + 1.5(Ws)	Linear - ultimate	LC0 - Selfweight	1.50
			LC1 - D - Dead load	1.35
			LC3 - Ws - Wind load suction	1.50
CO203	1.35(D) + 1.5(L)	Linear - ultimate	LC0 - Selfweight	1.50
			LC1 - D - Dead load	1.35
			LC4 - L - Imposed/Live Load	1.50

2.6. Calculation protocol

Calculation protocol

Linear calculation

Number of 2D elements	0
Number of 1D elements	59
Number of mesh nodes	48
Number of equations	288
Loadcases	LC0
	LC1
	LC2
	LC4
	LC3
Bending theory	Mindlin
Start of calculation	30.03.2015 20:10
End of calculation	30.03.2015 20:10

Sum of loads and reactions.

	[kN]	X	Y	Z
Loadcase LC0	loads	0.0	0.0	-1.5
	reactions in nodes	0.0	0.0	1.5
	reactions on lines	0.0	0.0	0.0
	contact 1D	0.0	0.0	0.0
	contact 2D	0.0	0.0	0.0
Loadcase LC1	loads	0.0	0.0	-3.0
	reactions in nodes	0.0	0.0	3.0
	reactions on lines	0.0	0.0	0.0
	contact 1D	0.0	0.0	0.0
	contact 2D	0.0	0.0	0.0
Loadcase LC2	loads	-11.7	-3.2	-0.6
	reactions in nodes	11.7	3.2	0.6
	reactions on lines	0.0	0.0	0.0
	contact 1D	0.0	0.0	0.0
	contact 2D	0.0	0.0	0.0
Loadcase LC4	loads	1.7	0.0	-2.2
	reactions in nodes	-1.7	0.0	2.2
	reactions on lines	0.0	0.0	0.0
	contact 1D	0.0	0.0	0.0
	contact 2D	0.0	0.0	0.0
Loadcase LC3	loads	16.1	3.2	0.6
	reactions in nodes	-16.1	-3.2	-0.6
	reactions on lines	0.0	0.0	0.0
	contact 1D	0.0	0.0	0.0
	contact 2D	0.0	0.0	0.0

CASTLE
LETTENWEG 118, 4123 ALLSCHWIL, SWITZERLAND
TEL.: +41 (0)61 501 8210 / +41 (0)79 508 1651
REGISTERED IN SWITZERLAND | VAT REGISTRATION CHE-437.605.665

NEMETSCHEK Scia		
	Project	Kings Cross Central, London
	Part	EP1.12a - Typical Element
	Description	1.665m x 3.65m - Offset bracket
	National code	EC - EN

3. Element Deformation [mm]

3.1. Element Deformation: CO101

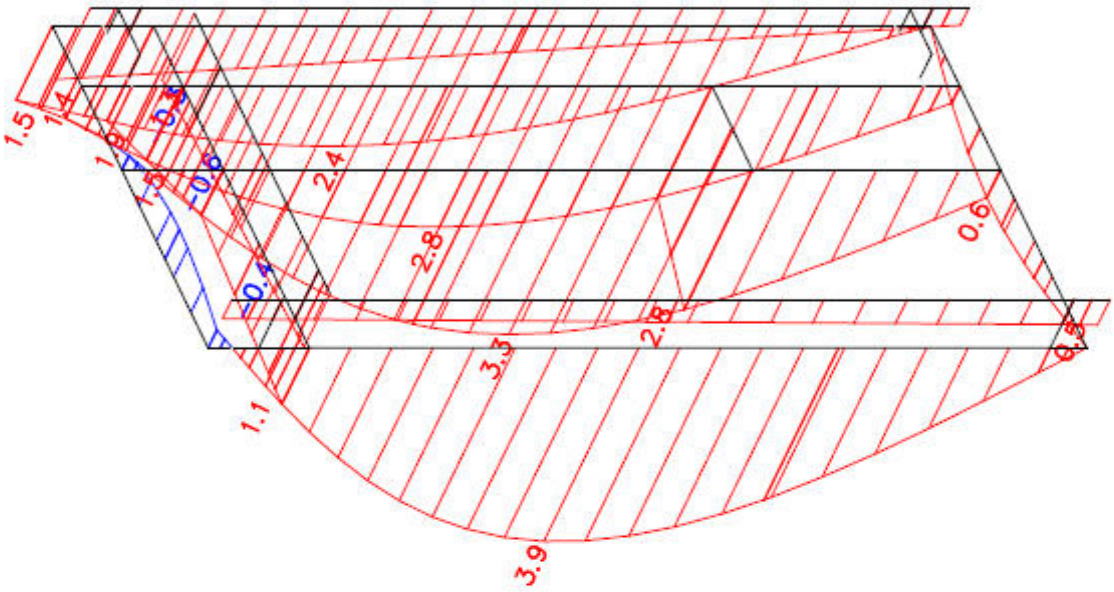

3.2. Element Deformation: CO102

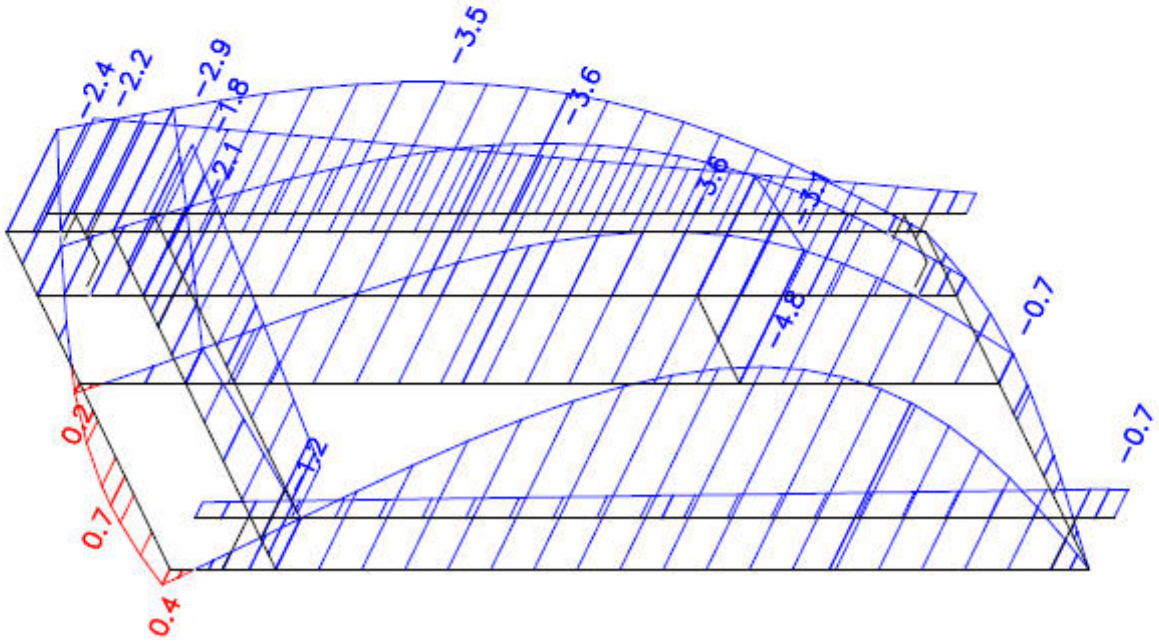

CASTLE
LETTENWEG 118, 4123 ALLSCHWIL, SWITZERLAND
TEL.: +41 (0)61 501 8210 / +41 (0)79 508 1651
REGISTERED IN SWITZERLAND | VAT REGISTRATION CHE-437.605.665

NEMETSCHEK Scia	Project	Kings Cross Central, London
	Part	EP1.12a - Typical Element
	Description	1.665m x 3.65m - Offset bracket
	National code	EC - EN

3.3. Element Deformation: CO103

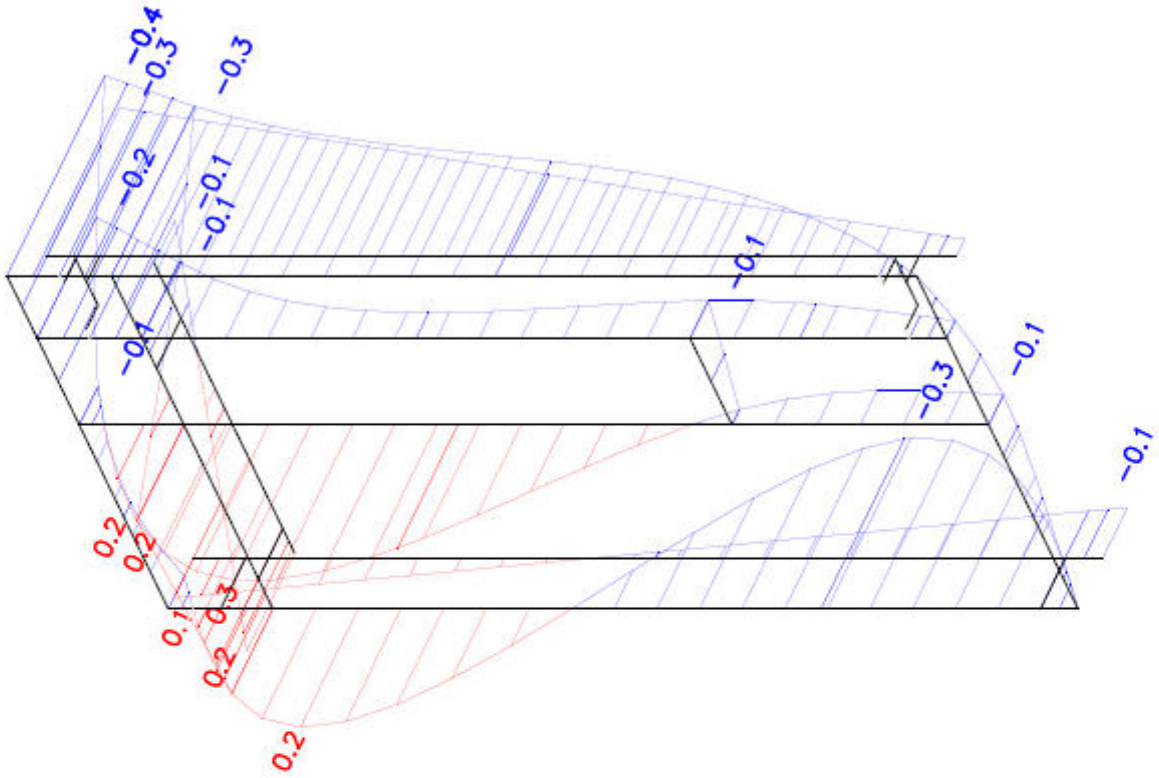

3.4. Relative deformation: CO103

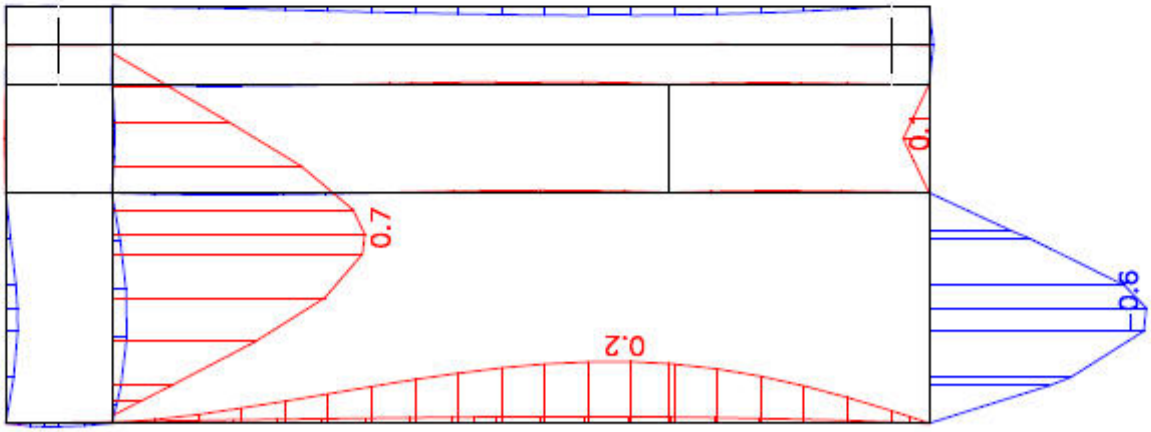

CASTLE
LETTENWEG 118, 4123 ALLSCHWIL, SWITZERLAND
TEL.: +41 (0)61 501 8210 / +41 (0)79 508 1651
REGISTERED IN SWITZERLAND | VAT REGISTRATION CHE-437.605.665

NEMETSCHEK Scia	Project	Kings Cross Central, London
	Part	EP1.12a - Typical Element
	Description	1.665m x 3.65m - Offset bracket
	National code	EC - EN

4. Stresses [N/mm²]

4.1. Stress: C0201

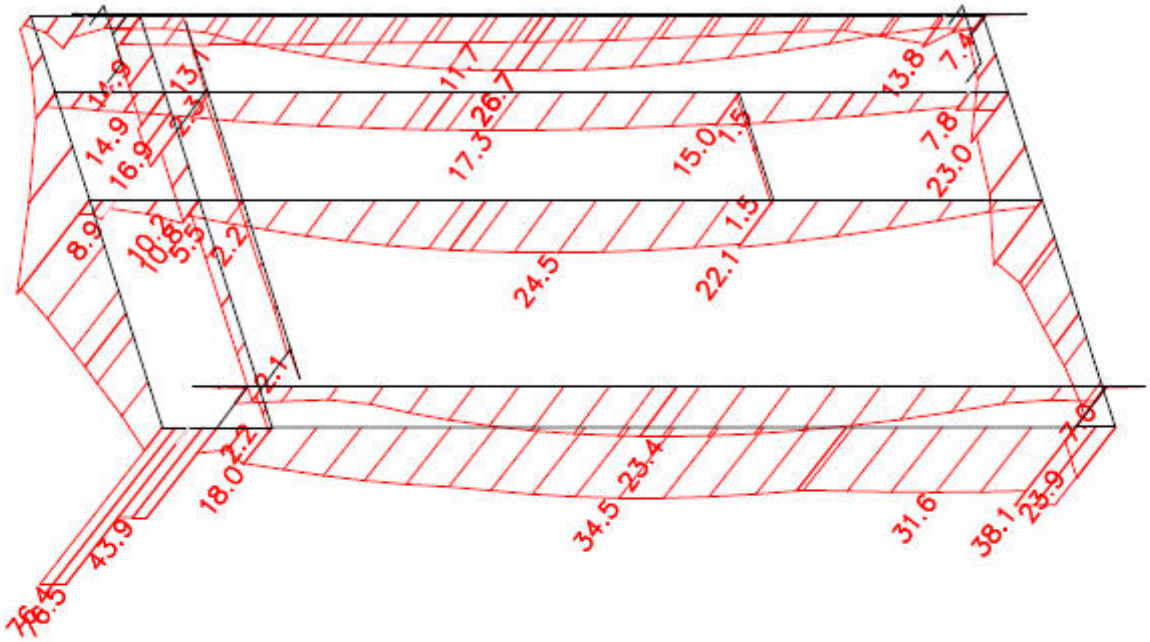

4.2. Stress: C0202

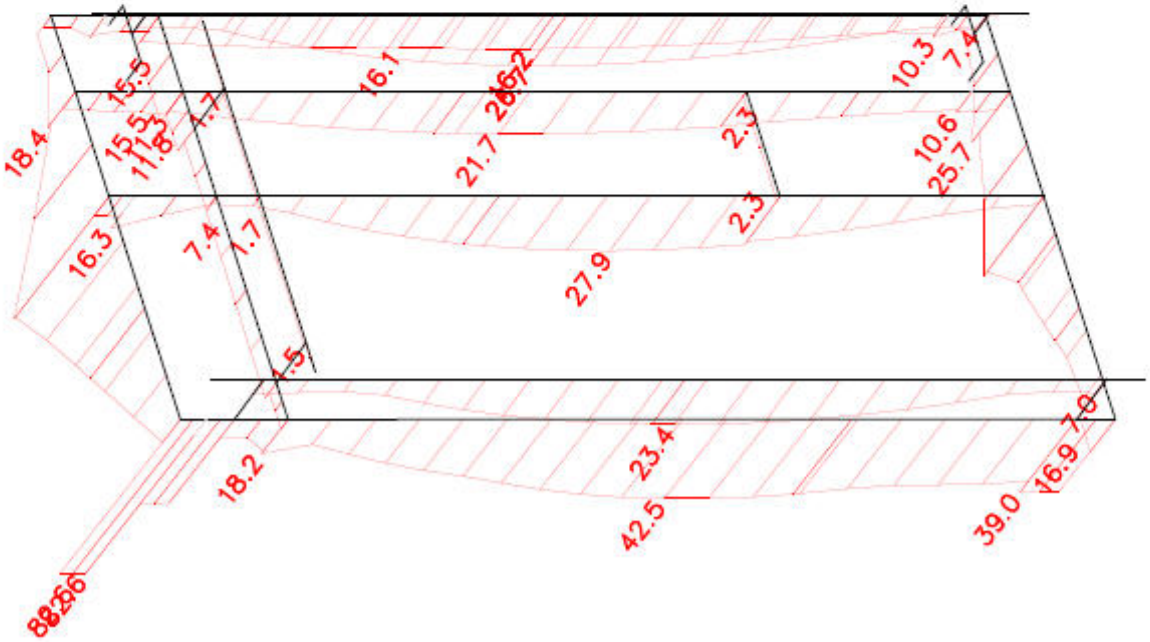

CASTLE
LETTENWEG 118, 4123 ALLSCHWIL, SWITZERLAND
TEL.: +41 (0)61 501 8210 / +41 (0)79 508 1651
REGISTERED IN SWITZERLAND | VAT REGISTRATION CHE-437.605.665

NEMETSCHEK Scia	Project	Kings Cross Central, London
	Part	EP1.12a - Typical Element
	Description	1.665m x 3.65m - Offset bracket
	National code	EC - EN

4.3. Stress: C0203

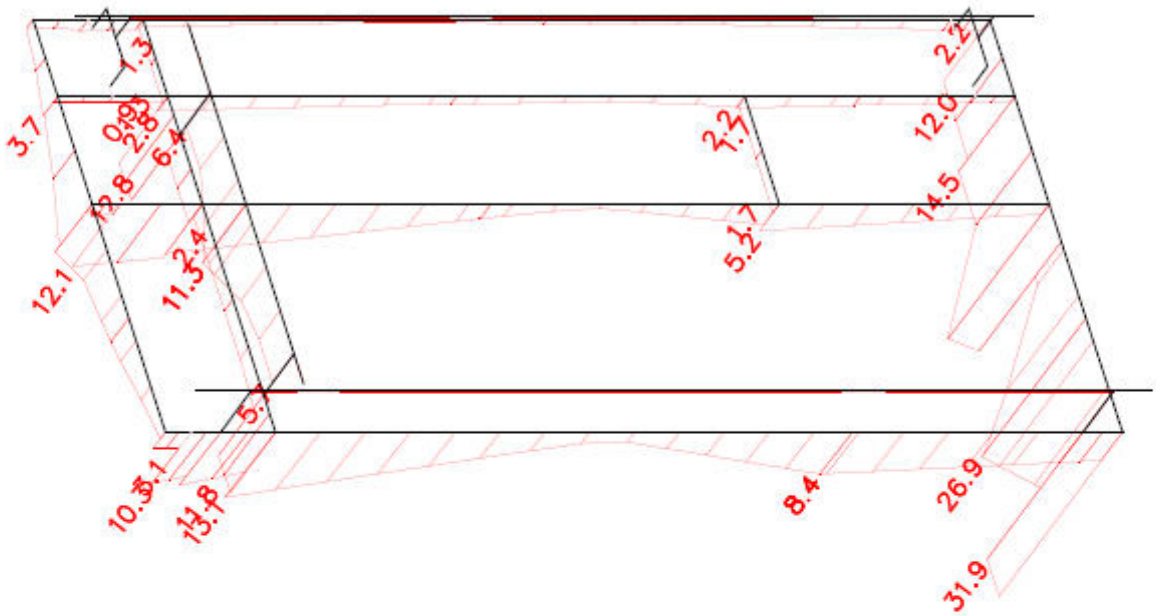

5. Factored Reaction Forces [kN]

5.1. Reactions: CO201

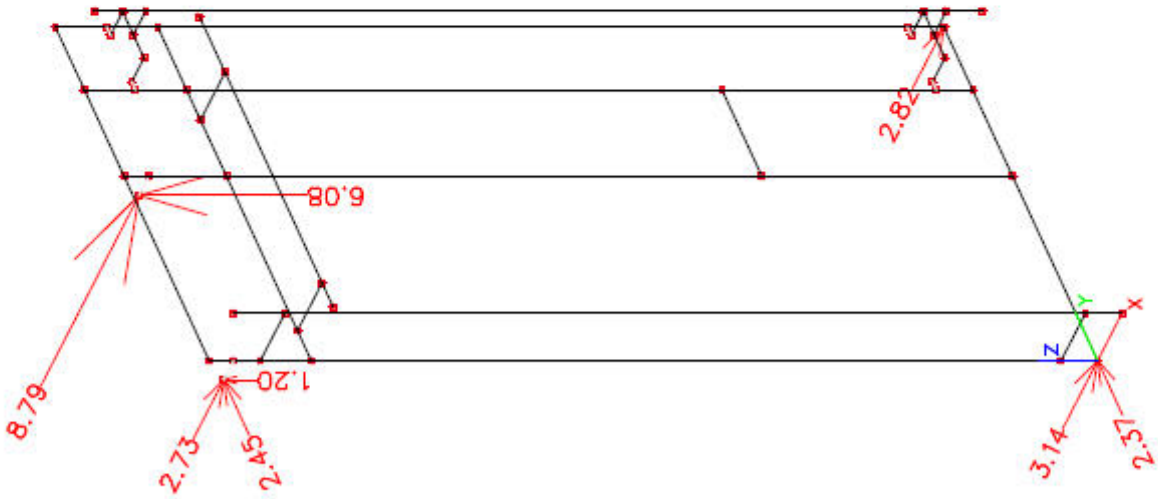

CASTLE
LETTENWEG 118, 4123 ALLSCHWIL, SWITZERLAND
TEL.: +41 (0)61 501 8210 / +41 (0)79 508 1651
REGISTERED IN SWITZERLAND | VAT REGISTRATION CHE-437.605.665

NEMETSCHEK Scia	Project	Kings Cross Central, London
	Part	EP1.12a - Typical Element
	Description	1.665m x 3.65m - Offset bracket
	National code	EC - EN

5.2. Reactions: CO202

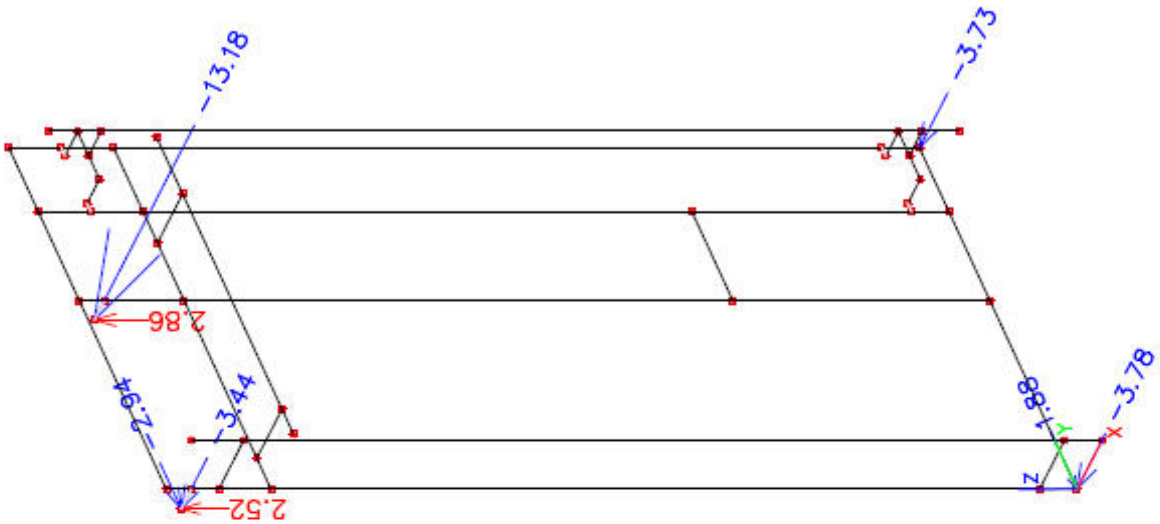

5.3. Reactions: CO203

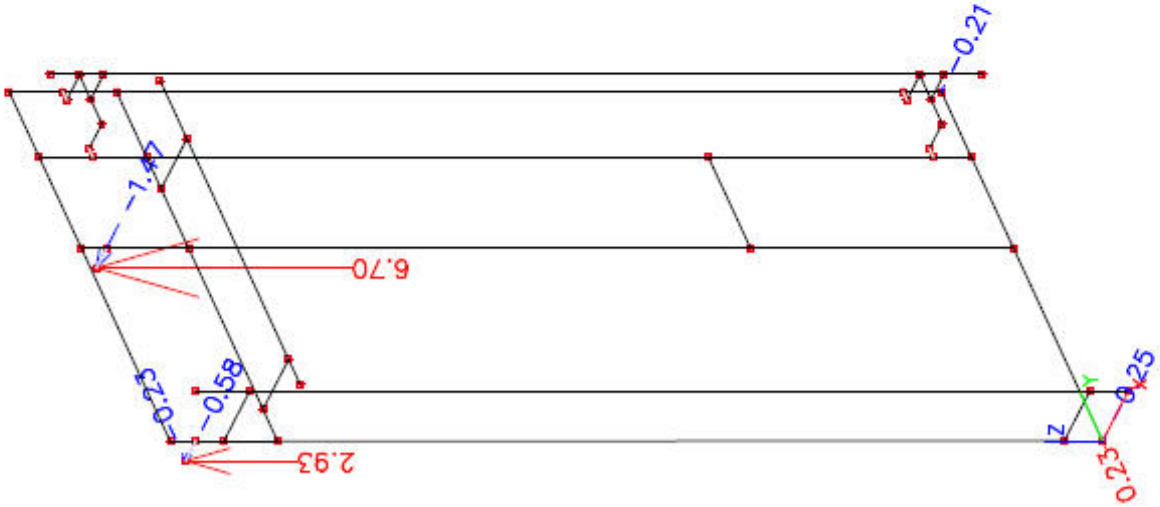

CASTLE
LETTENWEG 118, 4123 ALLSCHWIL, SWITZERLAND
TEL.: +41 (0)61 501 8210 / +41 (0)79 508 1651
REGISTERED IN SWITZERLAND | VAT REGISTRATION CHE-437.605.665

4 Curtain Wall Element with Free-standing Balustrade

4.1 Element with balustrade - EP1.11b

Refer to Scia [13] structural analysis results in the following page (section 4.1.3).

4.1.1 Deflection check to CWCT 2.3.2 & 3.5.2

i Frontal deflection

Frontal, δ_{max}	=	*4.8*	*mm*	
Frontal, δ_{allow} = 3650/300 + 5	=	*17.17*	*mm*	***0.28 < 1.0***

ii Balustrade deflection to BS 6180:2011 clause 6.4.1

δ_{max}	=	*20.9*	*mm*	
δ_{allow} = min{1460/65; 25}	=	*22.46*	*mm*	***0.93 < 1.0***

iii In-plane deflection

Local, δ_{max}	=	*0.6*	*mm*	
In-plane, δ_{allow} = min{915/500; 3}	=	*1.8*	*mm*	***0.33 < 1.0***

4.1.2 Stress check to BS EN 1999-1-1

Maximum calculated Von Mises (or equivalent) stress in the members,

$\sigma_{max} = \sqrt{(\sigma^2_{normal} + 3\tau^2_{shear})}$ = *51.3* *N/mm²*

EN AW-6060 T6

$\sigma_{el,Rd} = 1.0 \cdot 140/1.1$ = *127.27* *N/mm²* ***0.40 < 1.0***

4.1.3 Structural analysis

NEMETSCHEK Scia	Project	R7 Kings Cross Central, London
	Part	EP1.11b - Element with free-standing balustrade
	Description	1.345m x 3.65m - Standard bracket
	National code	EC - EN

1. Element Properties

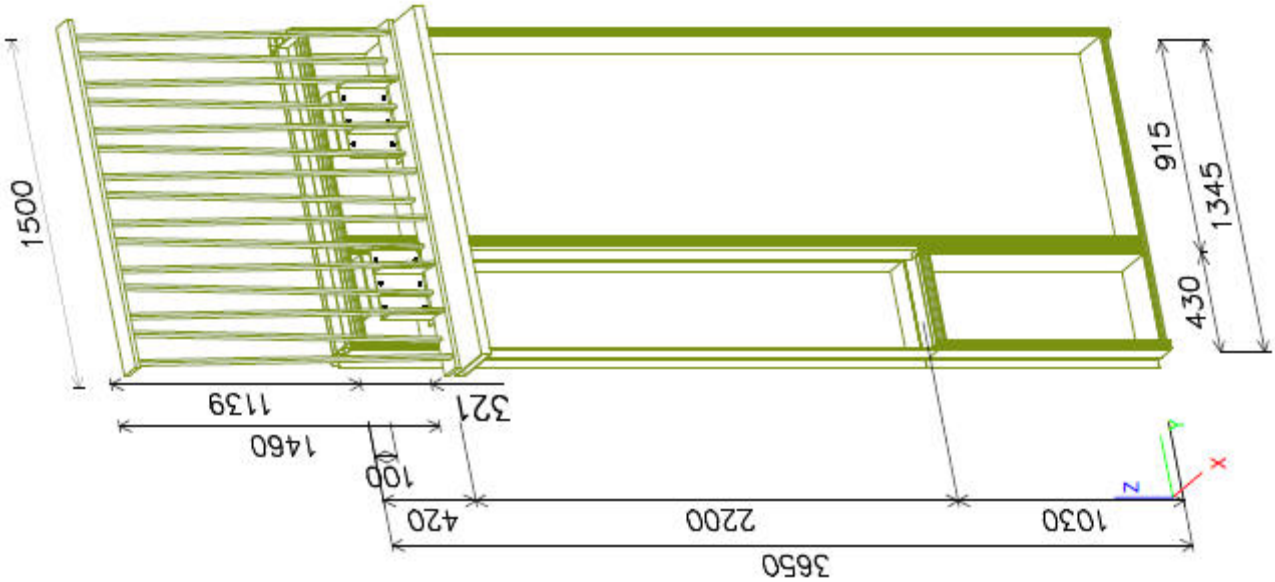

1.1. Member parameters

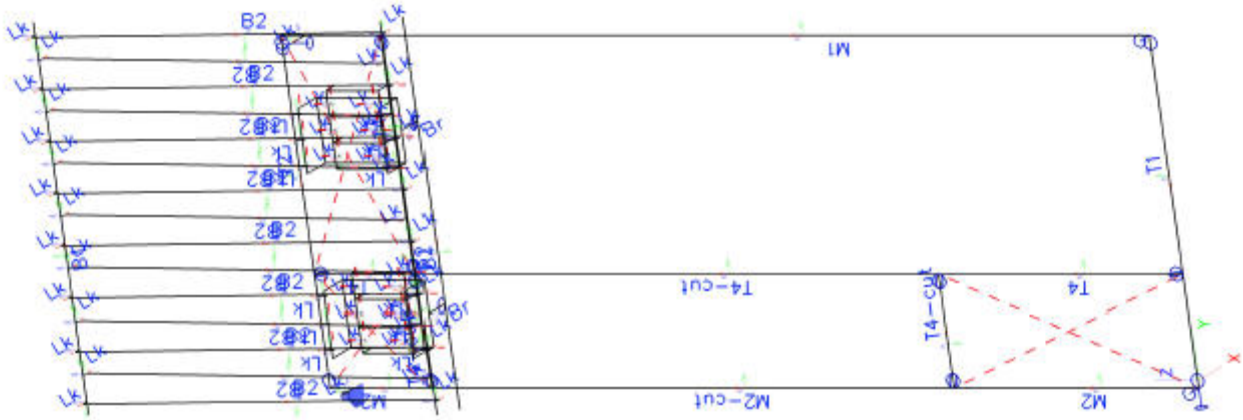

1.2. Cross-sections

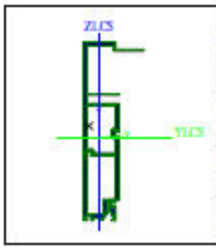

Name, Type	M1	CW 85
Item material, Fabrication	EN AW-6060 T6	extrusion
A [cm²]	14.40	
A y, z [cm²]	0.60	4.36
I y, z [cm⁴]	470.01	30.07
I YLCS, ZLCS [cm⁴]	469.77	30.31
I w [cm⁶], t [cm⁴]	1277.76	47.08
c YUCS, ZUCS [mm]	-16	85
Wel y, z [cm³]	47.88	6.28
Wpl y, z [cm³]	70.54	18.79

CASTLE
LETTENWEG 118, 4123 ALLSCHWIL, SWITZERLAND
TEL.: +41 (0)61 501 8210 / +41 (0)79 508 1651
REGISTERED IN SWITZERLAND | VAT REGISTRATION CHE-437.605.665

NEMETSCHEK Scia

Project	R7 Kings Cross Central, London
Part	EP1.11b - Element with free-standing balustrade
Description	1.345m x 3.65m - Standard bracket
National code	EC - EN

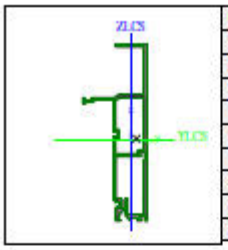

Name, Type	M2	CW 85
Item material, Fabrication	EN AW-6060 T6	extrusion
A [cm²]	14.37	
A y, z [cm²]	0.13	5.95
I y, z [cm⁴]	435.07	36.94
I YLCS, ZLCS [cm⁴]	434.79	37.22
I w [cm⁶], t [cm⁴]	560.26	51.47
c YUCS, ZUCS [mm]	15	83
Wel y, z [cm³]	43.52	7.21
Wpl y, z [cm³]	67.99	20.20

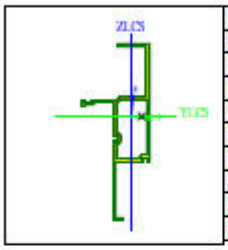

Name, Type	M2-cut	CW 85
Item material, Fabrication	EN AW-6060 T6	extrusion
A [cm²]	9.75	
A y, z [cm²]	0.07	0.96
I y, z [cm⁴]	184.06	26.15
I YLCS, ZLCS [cm⁴]	181.13	29.08
I w [cm⁶], t [cm⁴]	250.61	21.90
c YUCS, ZUCS [mm]	17	101
Wel y, z [cm³]	17.92	5.21
Wpl y, z [cm³]	34.54	13.32

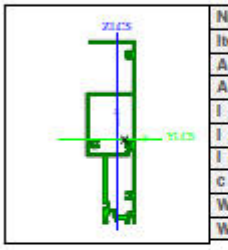

Name, Type	T1	CW 85
Item material, Fabrication	EN AW-6060 T6	extrusion
A [cm²]	15.02	
A y, z [cm²]	0.02	8.45
I y, z [cm⁴]	455.31	46.27
I YLCS, ZLCS [cm⁴]	455.28	46.30
I w [cm⁶], t [cm⁴]	856.13	65.96
c YUCS, ZUCS [mm]	13	83
Wel y, z [cm³]	45.67	14.53
Wpl y, z [cm³]	69.10	23.23

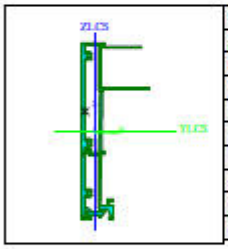

Name, Type	T2	CW 85
Item material, Fabrication	EN AW-6060 T6	extrusion
A [cm²]	14.88	
A y, z [cm²]	0.47	5.29
I y, z [cm⁴]	524.14	26.15
I YLCS, ZLCS [cm⁴]	523.86	26.43
I w [cm⁶], t [cm⁴]	748.43	25.08
c YUCS, ZUCS [mm]	5	-4
Wel y, z [cm³]	56.03	4.73
Wpl y, z [cm³]	77.50	15.83

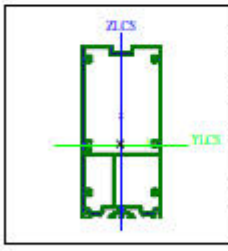

Name, Type	T4	CW 85
Item material, Fabrication	EN AW-6060 T6	general
A [cm²]	21.96	
A y, z [cm²]	10.49	11.50
I y, z [cm⁴]	851.66	228.46
I YLCS, ZLCS [cm⁴]	851.62	228.50
I w [cm⁶], t [cm⁴]	849.59	372.29
c YUCS, ZUCS [mm]	-1	-14
Wel y, z [cm³]	80.60	52.07
Wpl y, z [cm³]	114.42	63.09

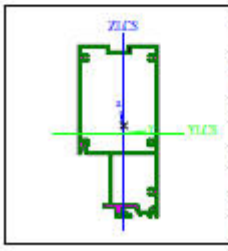

Name, Type	T4-cut	CW 85
Item material, Fabrication	EN AW-6060 T6	extrusion
A [cm²]	18.46	
A y, z [cm²]	0.07	2.48
I y, z [cm⁴]	714.44	172.57
I YLCS, ZLCS [cm⁴]	706.10	180.90
I w [cm⁶], t [cm⁴]	821.19	280.90
c YUCS, ZUCS [mm]	15	89
Wel y, z [cm³]	71.64	34.38
Wpl y, z [cm³]	98.26	50.86

CASTLE
LETTENWEG 118, 4123 ALLSCHWIL, SWITZERLAND
TEL.: +41 (0)61 501 8210 / +41 (0)79 508 1651
REGISTERED IN SWITZERLAND | VAT REGISTRATION CHE-437.605.665

NEMETSCHEK Scia

Project	R7 Kings Cross Central, London
Part	EP1.11b - Element with free-standing balustrade
Description	1.345m x 3.65m - Standard bracket
National code	EC - EN

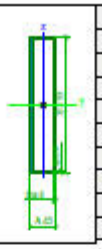

Name, Type	F2	O
Detailed	45; 4; 235; 4	
Item material, Fabrication	EN AW-6060 T6	general
A [cm²]	21.76	
A y, z [cm²]	3.61	17.07
I y, z [cm⁴]	1260.10	82.63
I w [cm⁶], t [cm⁴]	2108.77	245.64
c YUCS, ZUCS [mm]	23	118
Wel y, z [cm³]	107.24	36.73
Wpl y, z [cm³]	144.64	41.28

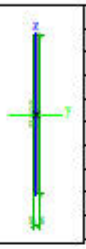

Name, Type	Br	Rectangle
Detailed	220; 8	
Item material, Fabrication	1.4301	general
A [cm²]	17.60	
A y, z [cm²]	14.67	14.67
I y, z [cm⁴]	709.87	0.94
I w [cm⁶], t [cm⁴]	35.27	3.63
c YUCS, ZUCS [mm]	4	110
Wel y, z [cm³]	64.53	2.35
Wpl y, z [cm³]	96.80	3.52

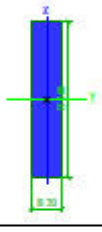

Name, Type	B1	Rectangle
Detailed	100; 20	
Item material, Fabrication	S 235	general
A [cm²]	20.00	
A y, z [cm²]	16.67	16.67
I y, z [cm⁴]	166.67	6.67
I w [cm⁶], t [cm⁴]	45.89	23.22
c YUCS, ZUCS [mm]	10	50
Wel y, z [cm³]	33.33	6.67
Wpl y, z [cm³]	50.00	10.00

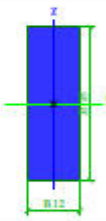

Name, Type	B2	Rectangle
Detailed	35; 12	
Item material, Fabrication	S 235	general
A [cm²]	4.20	
A y, z [cm²]	3.50	3.50
I y, z [cm⁴]	4.29	0.50
I w [cm⁶], t [cm⁴]	0.31	1.58
c YUCS, ZUCS [mm]	6	18
Wel y, z [cm³]	2.45	0.84
Wpl y, z [cm³]	3.67	1.26

Name, Detailed	Lk	Numerical
Material	Link	
Flexural buckling y-y, z-z	c	c
A [cm²]	10.00	
A y, z [cm²]	0.01	0.01
A L, D [m²/m]	1.0000e+00	0.0000e+00
c YUCS, ZUCS [mm]	1	1
α [deg]	0.00	
I y, z [cm⁴]	100.00	100.00
i y, z [mm]	32	32
Wel y, z [cm³]	100.00	100.00
Wpl y, z [cm³]	100.00	100.00
Mply +, - [Ncm]	0.00	0.00
Mplz +, - [Ncm]	0.00	0.00
d y, z [mm]	1	1
I t [cm⁴], w [cm⁶]	100.00	0.00
β y, z [mm]	-2	-2

CASTLE
LETTENWEG 118, 4123 ALLSCHWIL, SWITZERLAND
TEL.: +41 (0)61 501 8210 / +41 (0)79 508 1651
REGISTERED IN SWITZERLAND | VAT REGISTRATION CHE-437.605.665

NEMETSCHEK Scia	Project	R7 Kings Cross Central, London
	Part	EP1.11b - Element with free-standing balustrade
	Description	1.345m x 3.65m - Standard bracket
	National code	EC - EN

2. Loads [kN, kN/m]

2.1. LC1, Dead load

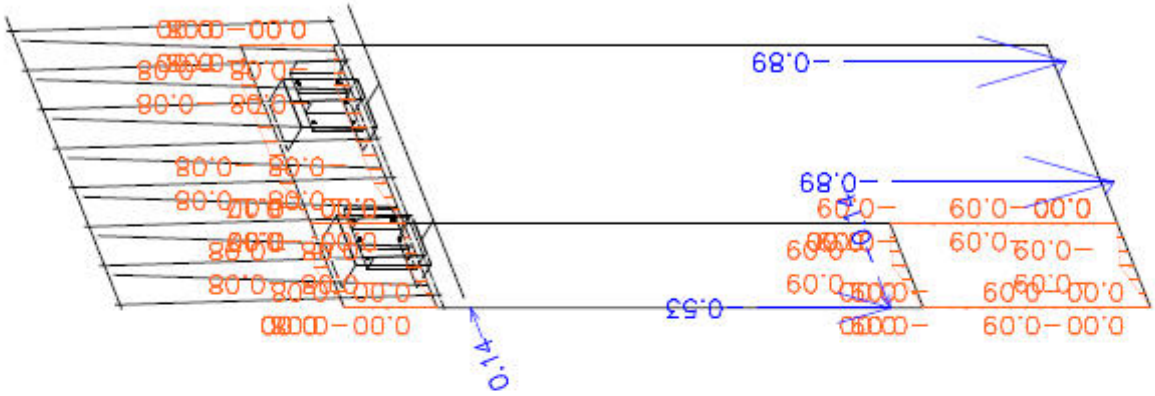

2.2. LC2, Wind pressure

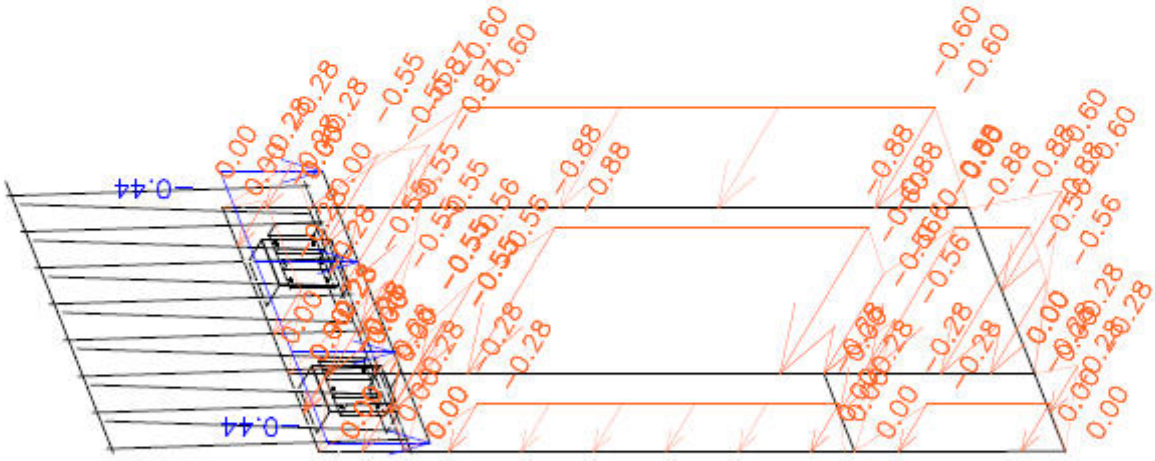

CASTLE
LETTENWEG 118, 4123 ALLSCHWIL, SWITZERLAND
TEL.: +41 (0)61 501 8210 / +41 (0)79 508 1651
REGISTERED IN SWITZERLAND | VAT REGISTRATION CHE-437.605.665

2.3. LC3, Wind suction

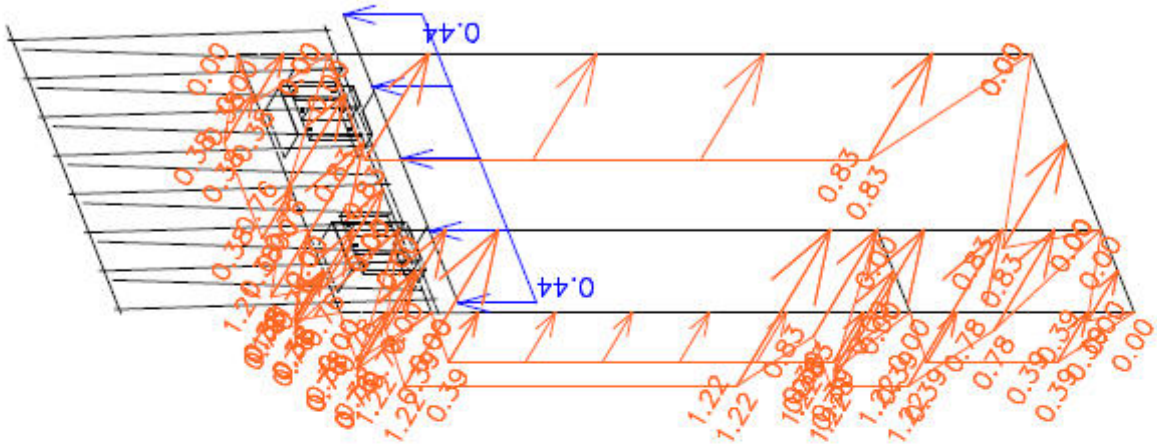

2.4. LC4, Imposed/live load

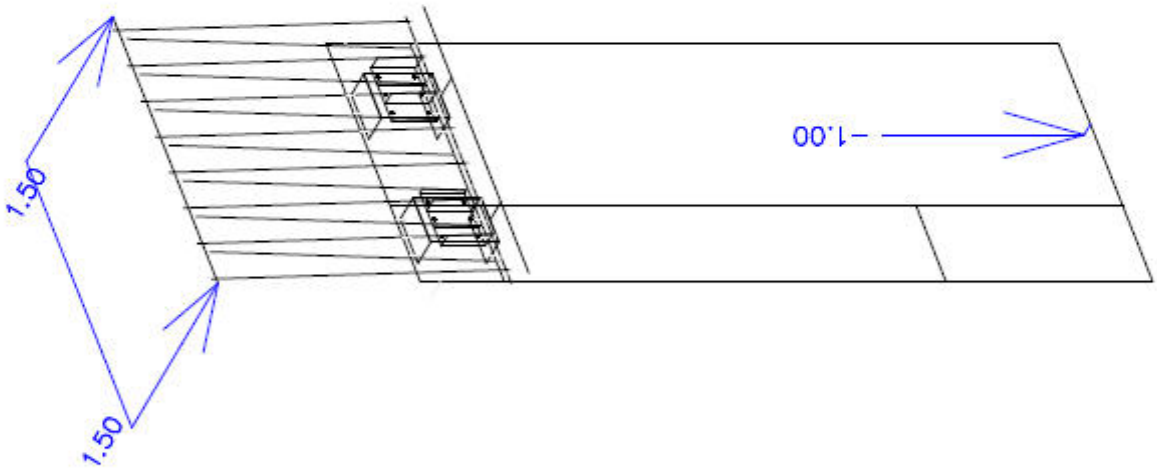

2.5. Nonlinear combinations

Name	Description	Type	Load cases	Coeff. [-]
NC101	(D) + (Wp)	Serviceability	LC0 - Selfweight	1.10
			LC1 - D - Dead load	1.00
			LC2 - Wp - Wind load pressure	1.00
NC102	(D) + (Ws)	Serviceability	LC0 - Selfweight	1.10
			LC1 - D - Dead load	1.00
			LC3 - Ws - Wind load suction	1.00
NC103	(D) + (L)	Serviceability	LC0 - Selfweight	1.10
			LC1 - D - Dead load	1.00
			LC4 - L - Imposed/Live Load	1.00
NC201	1.35(D) + 1.5(Wp)	Ultimate	LC0 - Selfweight	1.50

CASTLE
LETTENWEG 118, 4123 ALLSCHWIL, SWITZERLAND
TEL.: +41 (0)61 501 8210 / +41 (0)79 508 1651
REGISTERED IN SWITZERLAND | VAT REGISTRATION CHE-437.605.665

NEMETSCHEK Scia	Project	R7 Kings Cross Central, London
	Part	EP1.11b - Element with free-standing balustrade
	Description	1.345m x 3.65m - Standard bracket
	National code	EC - EN

Name	Description	Type	Load cases	Coeff. [-]
NC201	1.35(D) + 1.5(Wp)	Ultimate	LC1 - D - Dead load	1.35
			LC2 - Wp - Wind load pressure	1.50
NC202	1.35(D) + 1.5(Ws)	Ultimate	LC0 - Selfweight	1.50
			LC1 - D - Dead load	1.35
			LC3 - Ws - Wind load suction	1.50
NC203	1.35(D) + 0.75(Wp) + 1.5(L)	Ultimate	LC0 - Selfweight	1.50
			LC1 - D - Dead load	1.35
			LC2 - Wp - Wind load pressure	0.75
			LC4 - L - Imposed/Live Load	1.50

2.6. Calculation protocol

Calculation protocol

Nonlinear calculation

Number of 2D elements	1474
Number of 1D elements	234
Number of mesh nodes	1654
Number of equations	9924
Maximum iterations	50
Number of increments	1
Type of nonlinearity	II. order
Method (II. order)	Timoshenko
Bending theory	Mindlin

No. of combination	Start	End	No. of iterations
NC 1	30.03.2015 20:19	30.03.2015 20:19	3
NC 2	30.03.2015 20:19	30.03.2015 20:19	3
NC 3	30.03.2015 20:19	30.03.2015 20:19	3
NC 4	30.03.2015 20:19	30.03.2015 20:20	3
NC 5	30.03.2015 20:20	30.03.2015 20:20	3
NC 6	30.03.2015 20:20	30.03.2015 20:20	3

Sum of loads and reactions.

	[kN]	X	Y	Z
Nonlinear combination 1	loads	-6.4	0.0	-6.0
	reactions in nodes	6.4	0.0	6.0
	reactions on lines	0.0	0.0	0.0
	contact 1D	0.0	0.0	0.0
	contact 2D	0.0	0.0	0.0
Nonlinear combination 2	loads	8.9	0.0	-4.7
	reactions in nodes	-8.9	0.0	4.7
	reactions on lines	0.0	0.0	0.0
	contact 1D	0.0	0.0	0.0
	contact 2D	0.0	0.0	0.0
Nonlinear combination 3	loads	2.3	0.0	-6.3
	reactions in nodes	-2.3	0.0	6.3
	reactions on lines	0.0	0.0	0.0
	contact 1D	0.0	0.0	0.0
	contact 2D	0.0	0.0	0.0
Nonlinear combination 4	loads	-9.6	0.0	-8.2
	reactions in nodes	9.6	0.0	8.2
	reactions on lines	0.0	0.0	0.0
	contact 1D	0.0	0.0	0.0
	contact 2D	0.0	0.0	0.0
Nonlinear combination 5	loads	-1.4	0.0	-9.2
	reactions in nodes	1.4	0.0	9.2
	reactions on lines	0.0	0.0	0.0
	contact 1D	0.0	0.0	0.0
	contact 2D	0.0	0.0	0.0
Nonlinear combination 6	loads	13.3	0.0	-6.3
	reactions in nodes	-13.3	0.0	6.3
	reactions on lines	0.0	0.0	0.0
	contact 1D	0.0	0.0	0.0
	contact 2D	0.0	0.0	0.0

CASTLE
LETTENWEG 118, 4123 ALLSCHWIL, SWITZERLAND
TEL.: +41 (0)61 501 8210 / +41 (0)79 508 1651
REGISTERED IN SWITZERLAND | VAT REGISTRATION CHE-437.605.665

NEMETSCHEK Scia	Project	R7 Kings Cross Central, London
	Part	EP1.11b - Element with free-standing balustrade
	Description	1.345m × 3.65m - Standard bracket
	National code	EC - EN

3. Element Deformation [mm]

3.1. Element Deformation: NC101

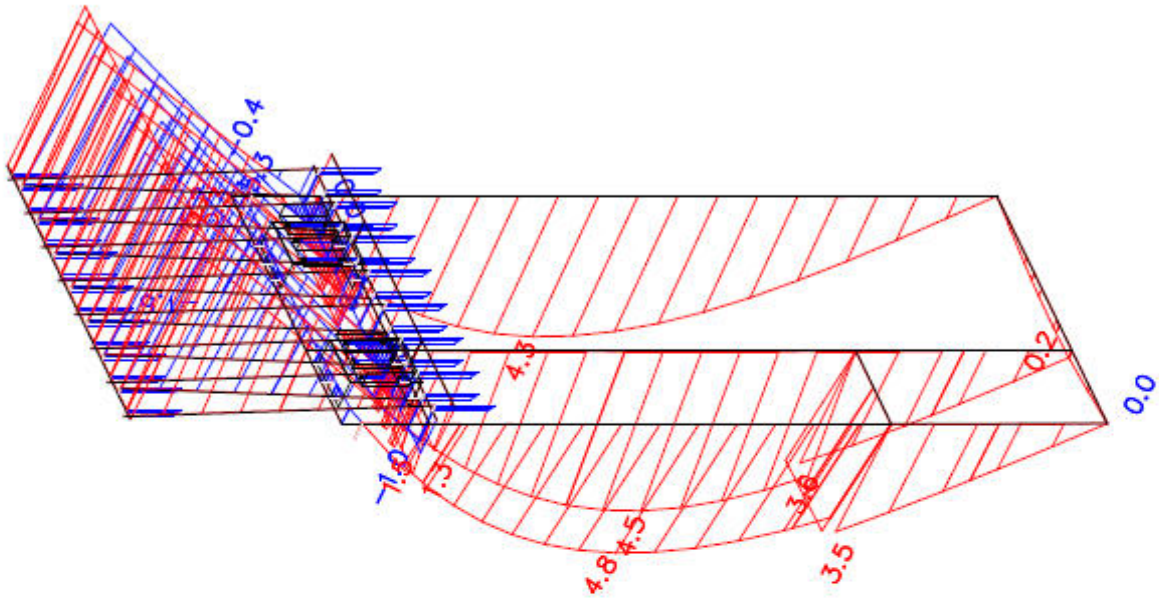

3.2. Element Deformation: NC102

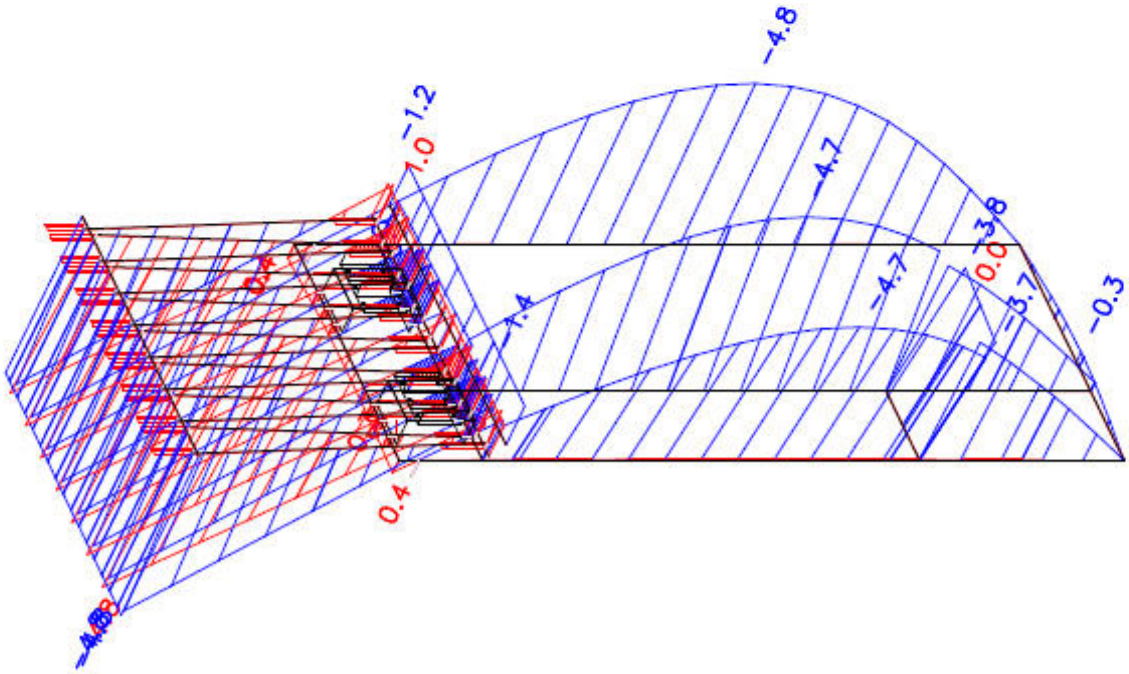

CASTLE
LETTENWEG 118, 4123 ALLSCHWIL, SWITZERLAND
TEL.: +41 (0)61 501 8210 / +41 (0)79 508 1651
REGISTERED IN SWITZERLAND | VAT REGISTRATION CHE-437.605.665

NEMETSCHEK Scia	Project	R7 Kings Cross Central, London
	Part	EP1.11b - Element with free-standing balustrade
	Description	1.345m x 3.65m - Standard bracket
	National code	EC - EN

3.3. Element Deformation: NC103

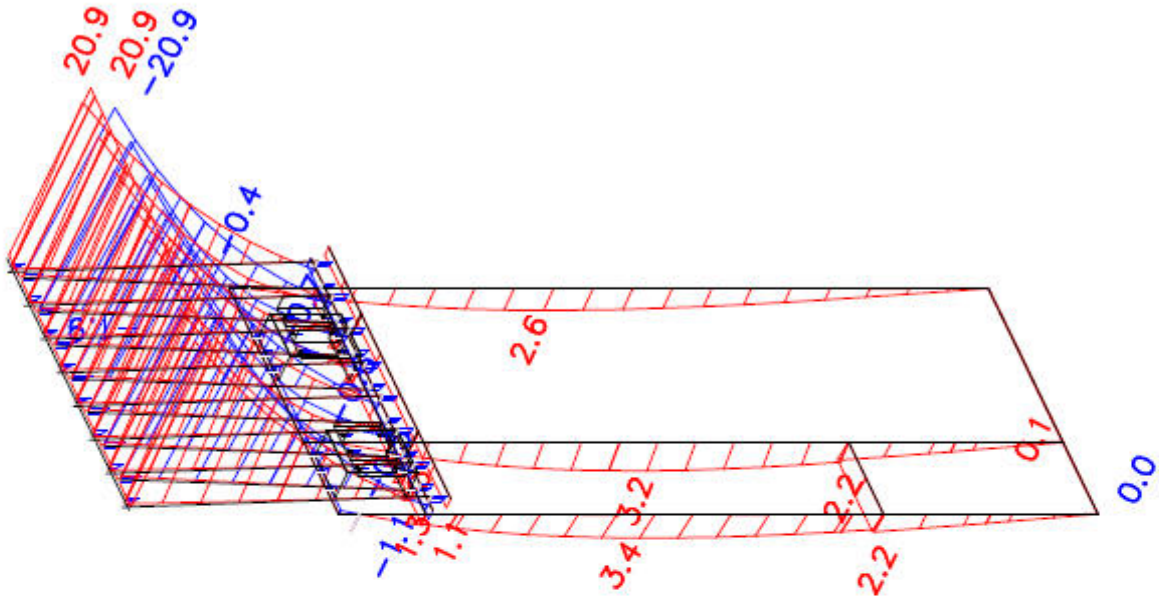

3.4. Relative deformation: NC103

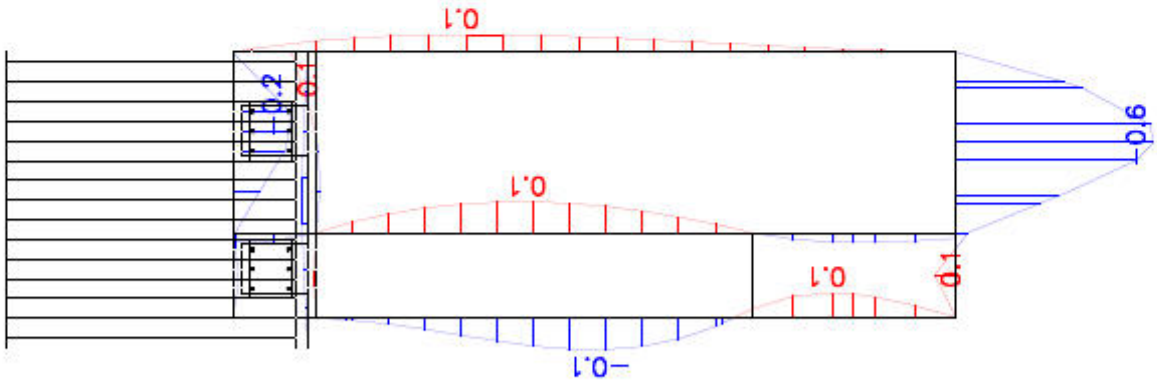

CASTLE
LETTENWEG 118, 4123 ALLSCHWIL, SWITZERLAND
TEL.: +41 (0)61 501 8210 / +41 (0)79 508 1651
REGISTERED IN SWITZERLAND | VAT REGISTRATION CHE-437.605.665

NEMETSCHEK Scia	Project	R7 Kings Cross Central, London
	Part	EP1.11b - Element with free-standing balustrade
	Description	1.345m × 3.65m - Standard bracket
	National code	EC - EN

4. Stresses [N/mm²]

4.1. Stress: NC201

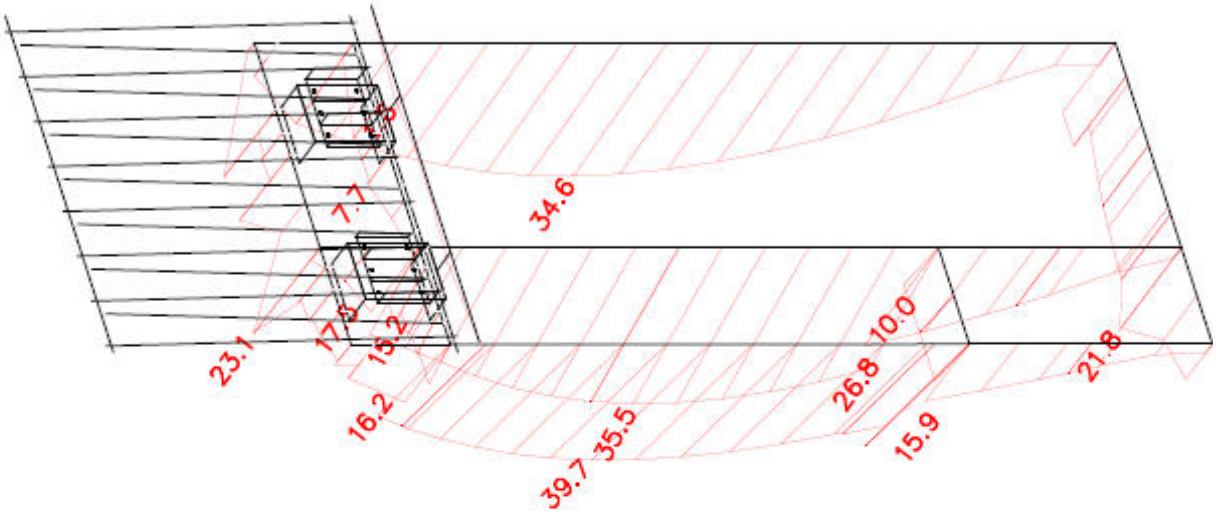

4.2. Stress: NC202

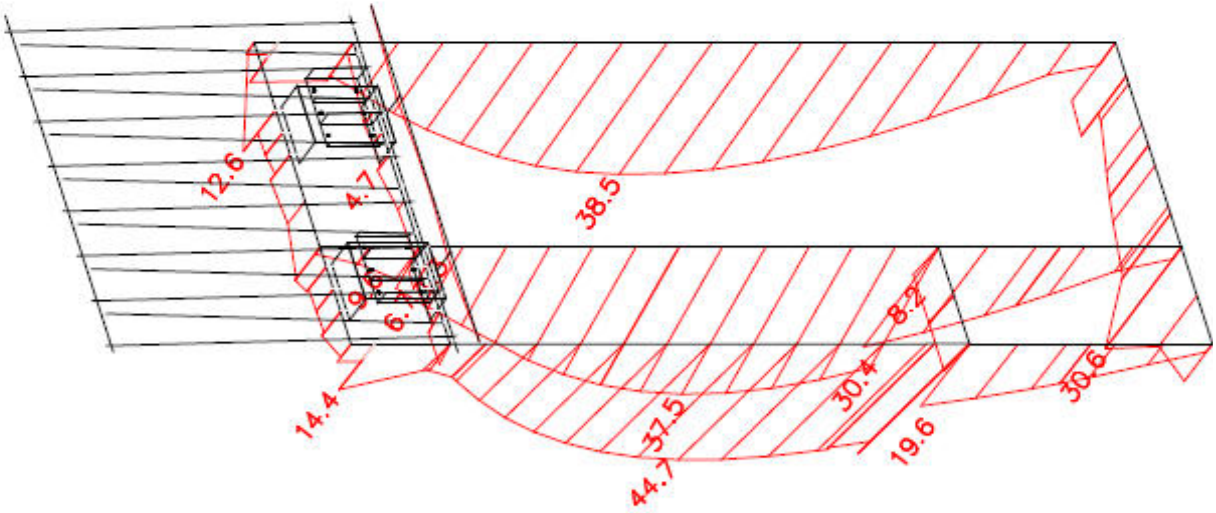

CASTLE
LETTENWEG 118, 4123 ALLSCHWIL, SWITZERLAND
TEL.: +41 (0)61 501 8210 / +41 (0)79 508 1651
REGISTERED IN SWITZERLAND | VAT REGISTRATION CHE-437.605.665

4.3. Stress: NC203

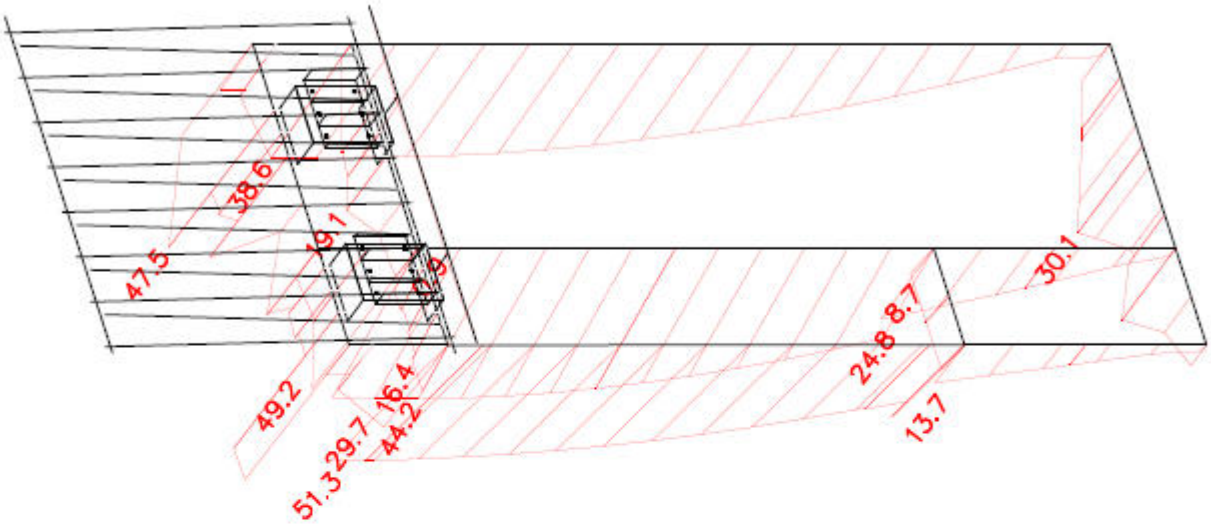

5. Factored Reaction Forces [kN]

5.1. Reactions: NC201

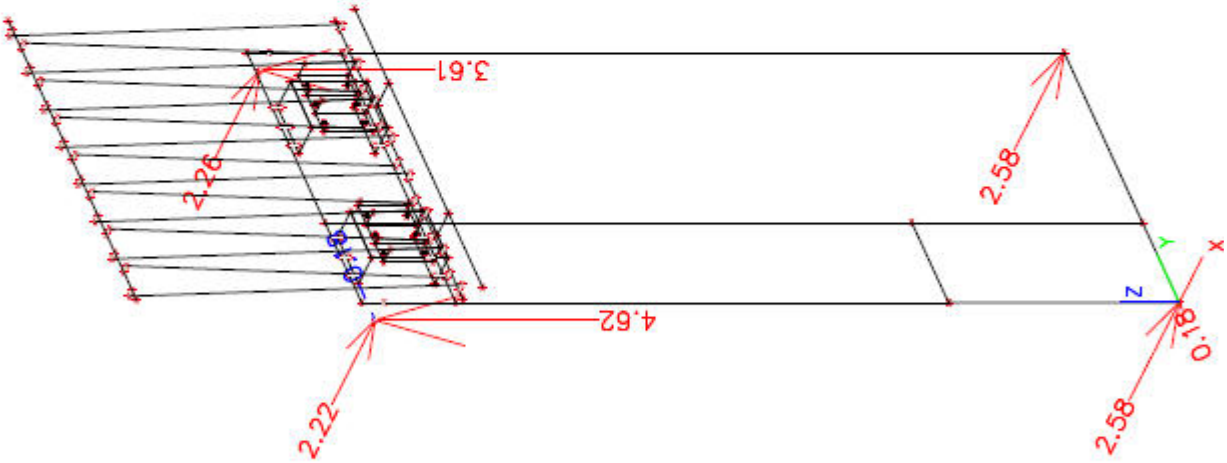

CASTLE
LETTENWEG 118, 4123 ALLSCHWIL, SWITZERLAND
TEL.: +41 (0)61 501 8210 / +41 (0)79 508 1651
REGISTERED IN SWITZERLAND | VAT REGISTRATION CHE-437.605.665

NEMETSCHEK Scia	Project	R7 Kings Cross Central, London
	Part	EP1.11b - Element with free-standing balustrade
	Description	1.345m × 3.65m - Standard bracket
	National code	EC - EN

5.2. Reactions: NC202

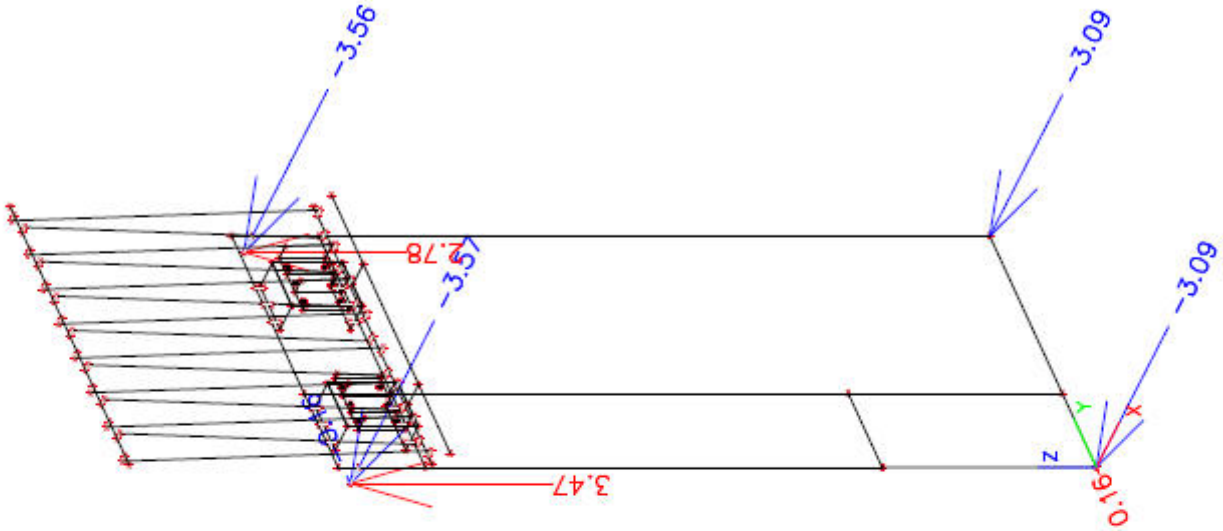

5.3. Reactions: NC203

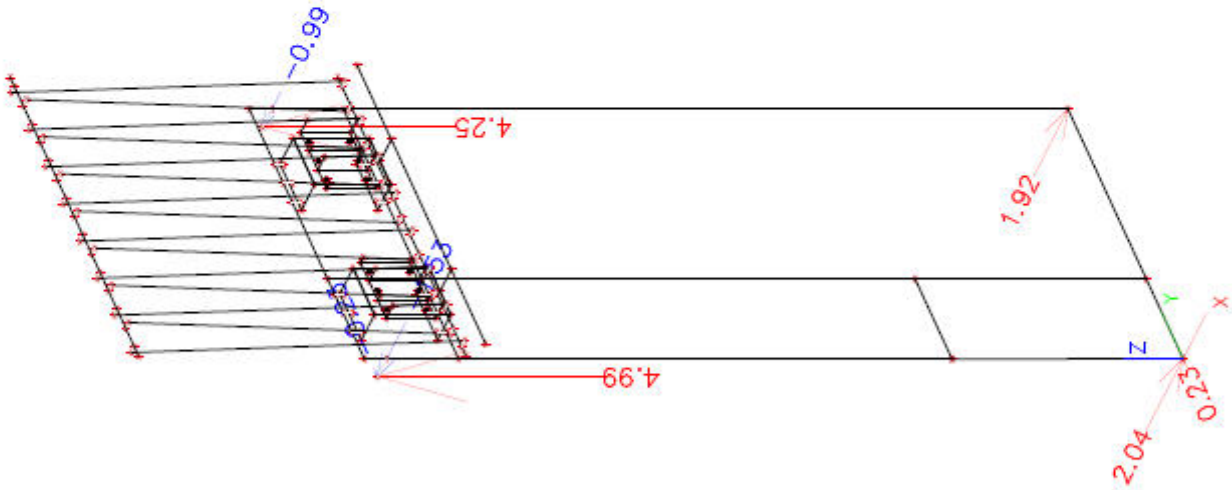

CASTLE
LETTENWEG 118, 4123 ALLSCHWIL, SWITZERLAND
TEL.: +41 (0)61 501 8210 / +41 (0)79 508 1651
REGISTERED IN SWITZERLAND | VAT REGISTRATION CHE-437.605.665

4.2 Element with balustrade - EP1.12b

Refer to Scia [13] structural analysis results in the following page (section 4.2.3).

4.2.1 Deflection check to CWCT 2.3.2 & 3.5.2

i Frontal deflection

Frontal, δ_{max}	=	4.7	mm	
Frontal, δ_{allow} = 3650/300 + 5	=	17.17	mm	**0.27 < 1.0**

ii Balustrade deflection to BS 6180:2011 clause 6.4.1

δ_{max}	=	19.9	mm	
δ_{allow} = min{1460/65; 25}	=	22.46	mm	**0.89 < 1.0**

iii In-plane deflection

Local, δ_{max}	=	0.7	mm	
In-plane, δ_{allow} = min{915/500; 3}	=	1.8	mm	**0.39 < 1.0**

4.2.2 Stress check to BS EN 1999-1-1

Maximum calculated Von Mises (or equivalent) stress in the members,

$\sigma_{max} = \sqrt{(\sigma^2_{normal} + 3\tau^2_{shear})}$	=	39.1	N/mm^2	

EN AW-6060 T6

$\sigma_{el,Rd}$ = 1.0·140/1.1	=	127.27	N/mm^2	**0.31 < 1.0**

4.2.3 Structural analysis

NEMETSCHEK Scia		
	Project	R7 Kings Cross Central, London
	Part	EP1.12b - Element with free-standing balustrade
	Description	1.655m x 3.65m - Standard bracket
	National code	EC - EN

1. Element Properties

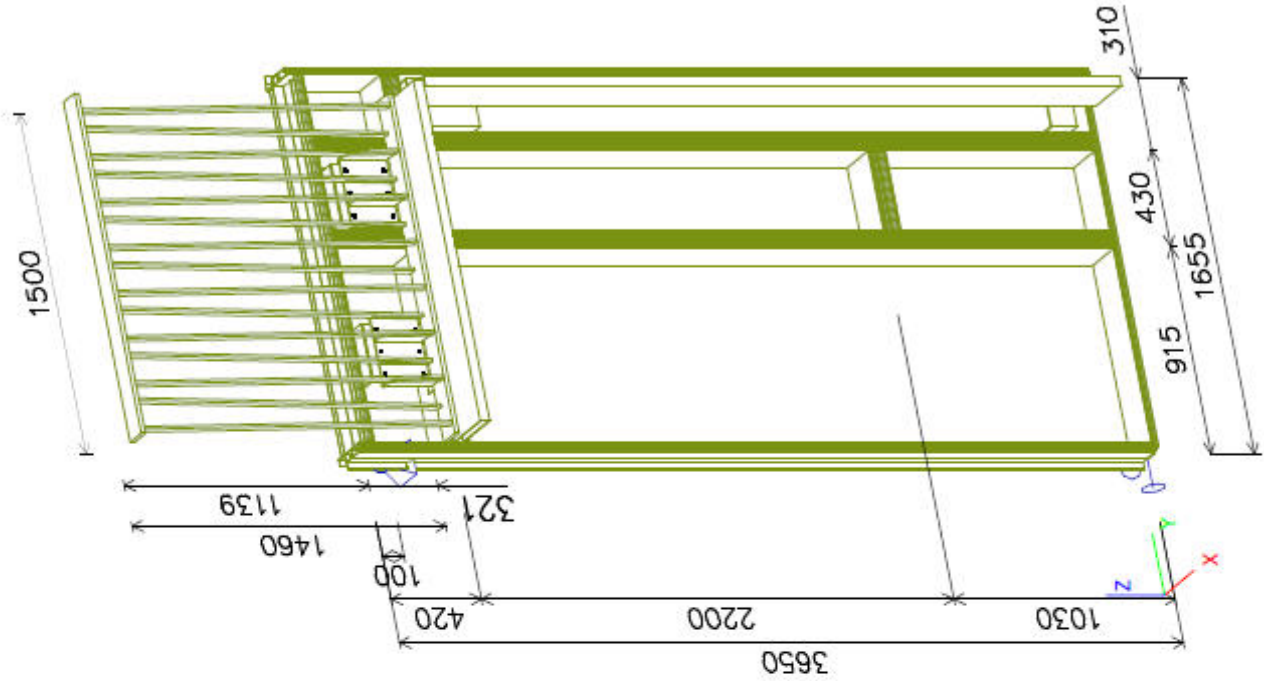

1.1. Member parameters

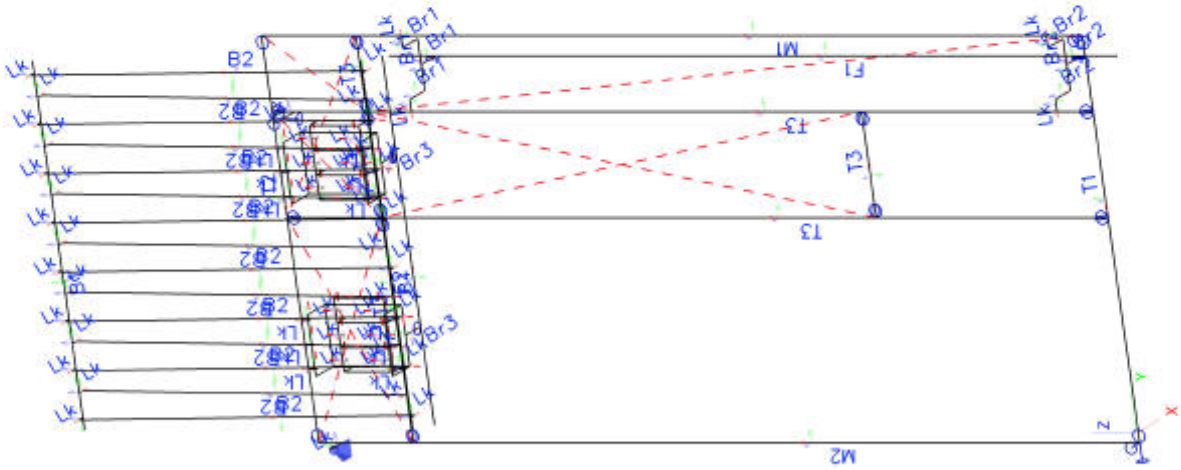

CASTLE
LETTENWEG 118, 4123 ALLSCHWIL, SWITZERLAND
TEL.: +41 (0)61 501 8210 / +41 (0)79 508 1651
REGISTERED IN SWITZERLAND | VAT REGISTRATION CHE-437.605.665

NEMETSCHEK Scia	Project	R7 Kings Cross Central, London
	Part	EP1.12b - Element with free-standing balustrade
	Description	1.655m x 3.65m - Standard bracket
	National code	EC - EN

1.2. Cross-sections

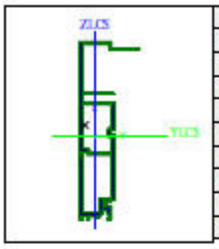

Name, Type	M1	CW 85
Item material, Fabrication	EN AW-6060 T6	extrusion
A [cm²]	14.40	
A y, z [cm²]	0.60	4.36
I y, z [cm⁴]	470.01	30.07
I YLCS, ZLCS [cm⁴]	469.77	30.31
I w [cm⁶], t [cm⁴]	1277.76	47.08
c YUCS, ZUCS [mm]	-16	85
Wel y, z [cm³]	47.88	6.28
Wpl y, z [cm³]	70.54	18.79

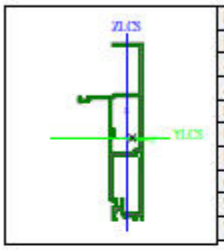

Name, Type	M2	CW 85
Item material, Fabrication	EN AW-6060 T6	extrusion
A [cm²]	14.37	
A y, z [cm²]	0.13	5.95
I y, z [cm⁴]	435.07	36.94
I YLCS, ZLCS [cm⁴]	434.79	37.22
I w [cm⁶], t [cm⁴]	560.26	51.47
c YUCS, ZUCS [mm]	15	83
Wel y, z [cm³]	43.52	7.21
Wpl y, z [cm³]	67.99	20.20

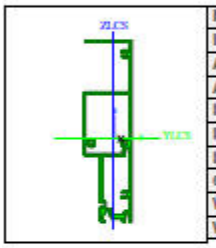

Name, Type	T1	CW 85
Item material, Fabrication	EN AW-6060 T6	extrusion
A [cm²]	15.02	
A y, z [cm²]	0.02	8.45
I y, z [cm⁴]	455.31	46.27
I YLCS, ZLCS [cm⁴]	455.28	46.30
I w [cm⁶], t [cm⁴]	856.13	65.96
c YUCS, ZUCS [mm]	13	83
Wel y, z [cm³]	45.67	14.53
Wpl y, z [cm³]	69.10	23.23

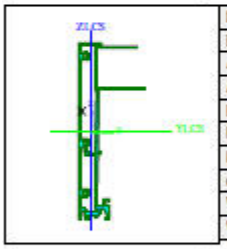

Name, Type	T2	CW 85
Item material, Fabrication	EN AW-6060 T6	extrusion
A [cm²]	14.88	
A y, z [cm²]	0.47	5.29
I y, z [cm⁴]	524.14	26.15
I YLCS, ZLCS [cm⁴]	523.86	26.43
I w [cm⁶], t [cm⁴]	748.43	25.08
c YUCS, ZUCS [mm]	5	-4
Wel y, z [cm³]	56.03	4.73
Wpl y, z [cm³]	77.50	15.83

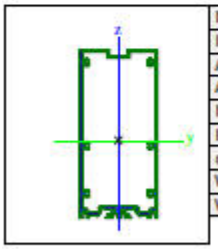

Name, Type	T3	CW 85
Item material, Fabrication	EN AW-6060 T6	extrusion
A [cm²]	18.26	
A y, z [cm²]	0.34	9.60
I y, z [cm⁴]	819.46	215.65
I w [cm⁶], t [cm⁴]	828.73	360.96
c YUCS, ZUCS [mm]	5	80
Wel y, z [cm³]	81.19	50.74
Wpl y, z [cm³]	109.27	57.85

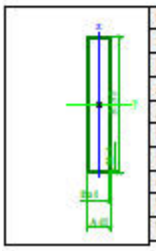

Name, Type	F1	O
Detailed	40; 4; 235; 4	
Item material, Fabrication	EN AW-6060 T6	general
A [cm²]	21.36	
A y, z [cm²]	3.23	16.95
I y, z [cm⁴]	1206.74	63.35
I w [cm⁶], t [cm⁴]	1746.60	193.60
c YUCS, ZUCS [mm]	20	117
Wel y, z [cm³]	102.70	31.67
Wpl y, z [cm³]	140.02	35.89

CASTLE
LETTENWEG 118, 4123 ALLSCHWIL, SWITZERLAND
TEL.: +41 (0)61 501 8210 / +41 (0)79 508 1651
REGISTERED IN SWITZERLAND | VAT REGISTRATION CHE-437.605.665

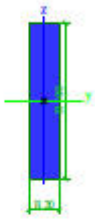

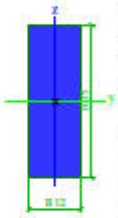

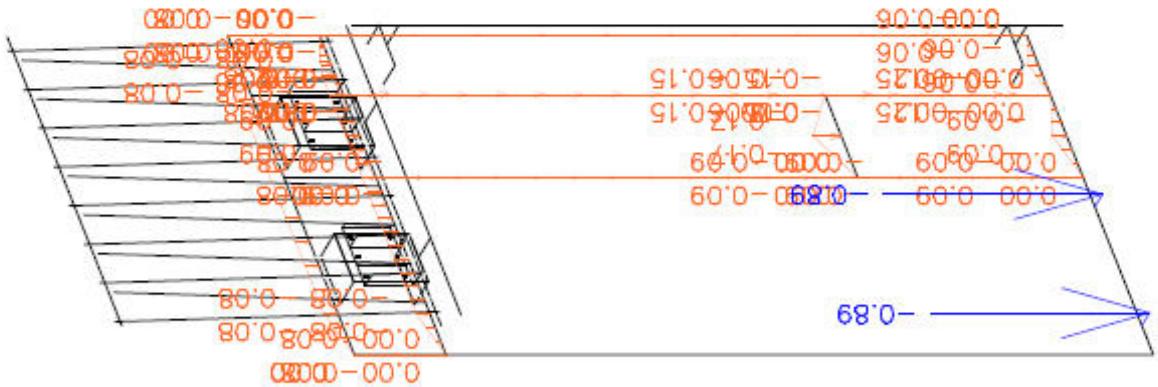

Project	R7 Kings Cross Central, London
Part	EP1.12b - Element with free-standing balustrade
Description	1.655m x 3.65m - Standard bracket
National code	EC - EN

Name, Type	F2	O
Detailed	45; 4; 235; 4	
Item material, Fabrication	EN AW-6060 T6	general
A [cm²]	21.76	
A y, z [cm²]	3.61	17.07
I y, z [cm⁴]	1260.10	82.63
I w [cm⁶], t [cm⁴]	2108.77	245.64
c YUCS, ZUCS [mm]	23	118
Wel y, z [cm³]	107.24	36.73
Wpl y, z [cm³]	144.64	41.28

Name, Type	B1	Rectangle
Detailed	100; 20	
Item material, Fabrication	S 235	general
A [cm²]	20.00	
A y, z [cm²]	16.67	16.67
I y, z [cm⁴]	166.67	6.67
I w [cm⁶], t [cm⁴]	45.89	23.22
c YUCS, ZUCS [mm]	10	50
Wel y, z [cm³]	33.33	6.67
Wpl y, z [cm³]	50.00	10.00

Name, Type	B2	Rectangle
Detailed	35; 12	
Item material, Fabrication	S 235	general
A [cm²]	4.20	
A y, z [cm²]	3.50	3.50
I y, z [cm⁴]	4.29	0.50
I w [cm⁶], t [cm⁴]	0.31	1.58
c YUCS, ZUCS [mm]	6	18
Wel y, z [cm³]	2.45	0.84
Wpl y, z [cm³]	3.67	1.26

2. Loads [kN, kN/m]

2.1. LC1, Dead load

30.03.2015	3/11

2.2. LC2, Wind pressure

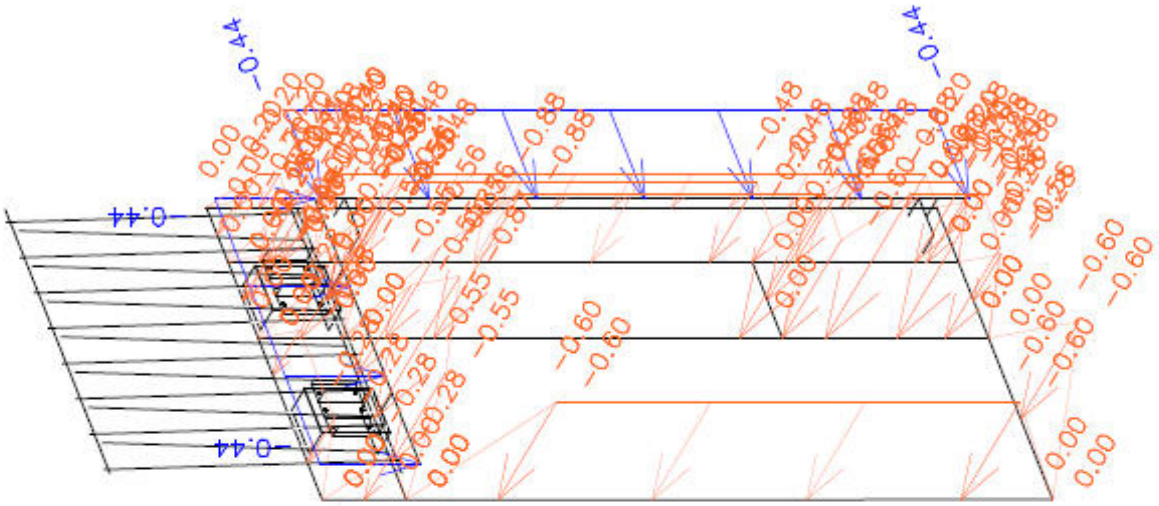

2.3. LC3, Wind suction

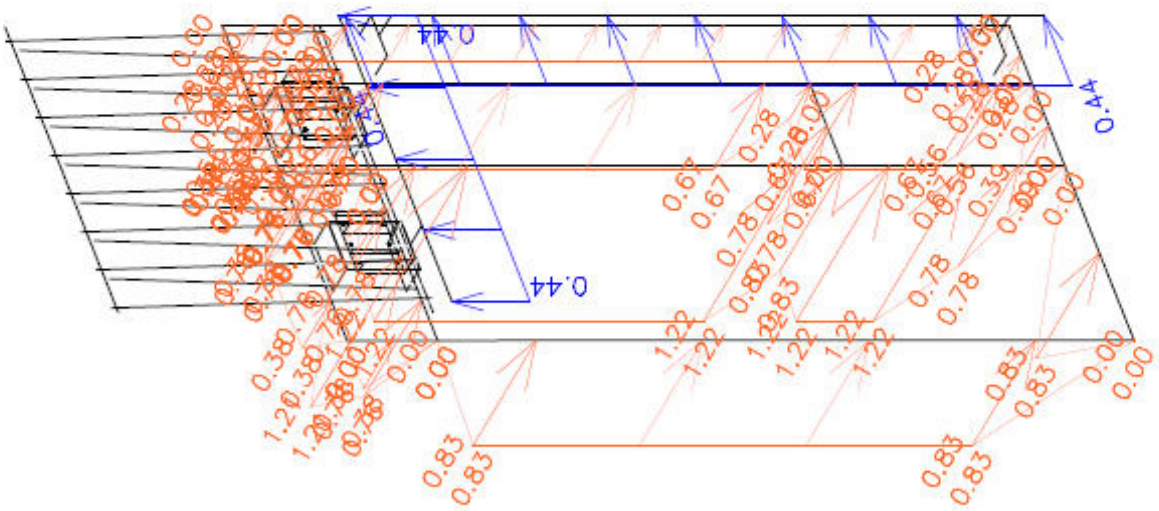

CASTLE
LETTENWEG 118, 4123 ALLSCHWIL, SWITZERLAND
TEL.: +41 (0)61 501 8210 / +41 (0)79 508 1651
REGISTERED IN SWITZERLAND | VAT REGISTRATION CHE-437.605.665

2.4. LC4, Imposed/live load

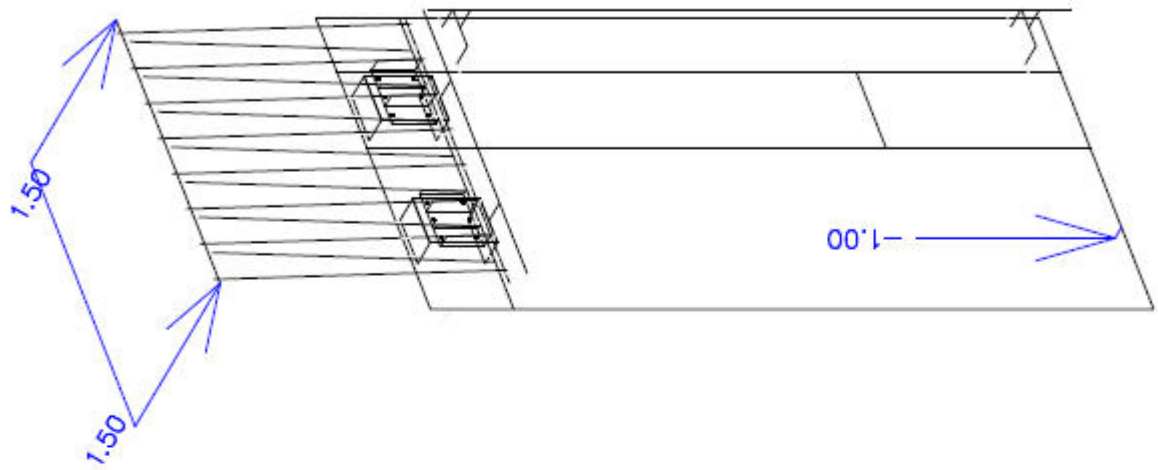

2.5. Nonlinear combinations

Name	Description	Type	Load cases	Coeff. [-]
NC101	(D) + (Wp)	Serviceability	LC0 - Selfweight	1.10
			LC1 - D - Dead load	1.00
			LC2 - Wp - Wind load pressure	1.00
NC102	(D) + (Ws)	Serviceability	LC0 - Selfweight	1.10
			LC1 - D - Dead load	1.00
			LC3 - Ws - Wind load suction	1.00
NC103	(D) + (L)	Serviceability	LC0 - Selfweight	1.10
			LC1 - D - Dead load	1.00
			LC4 - L - Imposed/Live Load	1.00
NC201	1.35(D) + 1.5(Wp)	Ultimate	LC0 - Selfweight	1.50
			LC1 - D - Dead load	1.35
			LC2 - Wp - Wind load pressure	1.50
NC202	1.35(D) + 1.5(Ws)	Ultimate	LC0 - Selfweight	1.50
			LC1 - D - Dead load	1.35
			LC3 - Ws - Wind load suction	1.50
NC203	1.35(D) + 0.75(Wp) + 1.5(L)	Ultimate	LC0 - Selfweight	1.50
			LC1 - D - Dead load	1.35
			LC2 - Wp - Wind load pressure	0.75
			LC4 - L - Imposed/Live Load	1.50

2.6. Calculation protocol

Calculation protocol

Nonlinear calculation

Number of 2D elements	1472
Number of 1D elements	260
Number of mesh nodes	1675
Number of equations	10050
Maximum iterations	50
Number of increments	1
Type of nonlinearity	II. order
Method (II. order)	Timoshenko
Bending theory	Mindlin

No. of combination	Start	End	No. of iterations
NC 1	30.03.2015 20:26	30.03.2015 20:26	3
NC 2	30.03.2015 20:26	30.03.2015 20:26	3
NC 3	30.03.2015 20:26	30.03.2015 20:26	3

CASTLE
LETTENWEG 118, 4123 ALLSCHWIL, SWITZERLAND
TEL.: +41 (0)61 501 8210 / +41 (0)79 508 1651
REGISTERED IN SWITZERLAND | VAT REGISTRATION CHE-437.605.665

NEMETSCHEK Scia	Project	R7 Kings Cross Central, London
	Part	EP1.12b - Element with free-standing balustrade
	Description	1.655m × 3.65m - Standard bracket
	National code	EC - EN

Calculation protocol

No. of combination	Start	End	No. of iterations
NC 4	30.03.2015 20:26	30.03.2015 20:26	3
NC 5	30.03.2015 20:26	30.03.2015 20:26	3
NC 6	30.03.2015 20:26	30.03.2015 20:26	3

Sum of loads and reactions.

	[kN]	X	Y	Z
Nonlinear combination 1	loads	-7.9	-1.4	-6.8
	reactions in nodes	7.9	1.4	6.8
	reactions on lines	0.0	0.0	0.0
	contact 1D	0.0	0.0	0.0
	contact 2D	0.0	0.0	0.0
Nonlinear combination 2	loads	10.9	1.4	-5.5
	reactions in nodes	-10.9	-1.4	5.5
	reactions on lines	0.0	0.0	0.0
	contact 1D	0.0	0.0	0.0
	contact 2D	0.0	0.0	0.0
Nonlinear combination 3	loads	2.3	0.0	-7.1
	reactions in nodes	-2.3	0.0	7.1
	reactions on lines	0.0	0.0	0.0
	contact 1D	0.0	0.0	0.0
	contact 2D	0.0	0.0	0.0
Nonlinear combination 4	loads	-11.9	-2.1	-9.3
	reactions in nodes	11.9	2.1	9.3
	reactions on lines	0.0	0.0	0.0
	contact 1D	0.0	0.0	0.0
	contact 2D	0.0	0.0	0.0
Nonlinear combination 5	loads	-2.6	-1.1	-10.3
	reactions in nodes	2.6	1.1	10.3
	reactions on lines	0.0	0.0	0.0
	contact 1D	0.0	0.0	0.0
	contact 2D	0.0	0.0	0.0
Nonlinear combination 6	loads	16.4	2.1	-7.3
	reactions in nodes	-16.4	-2.1	7.3
	reactions on lines	0.0	0.0	0.0
	contact 1D	0.0	0.0	0.0
	contact 2D	0.0	0.0	0.0

3. Element Deformation [mm]

3.1. Element Deformation: NC101

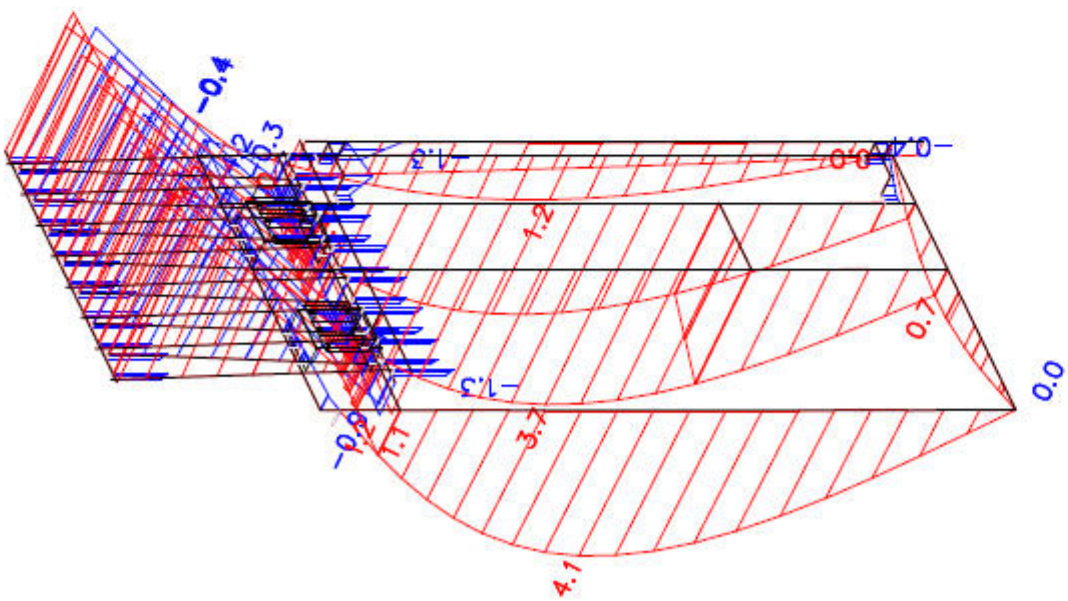

CASTLE STRUCTURAL ENGINEERS
LETTENWEG 118, 4123 ALLSCHWIL, SWITZERLAND
TEL.: +41 (0)61 501 8210 / +41 (0)79 508 1651
REGISTERED IN SWITZERLAND | VAT REGISTRATION CHE-437.605.665

3.2. Element Deformation: NC102

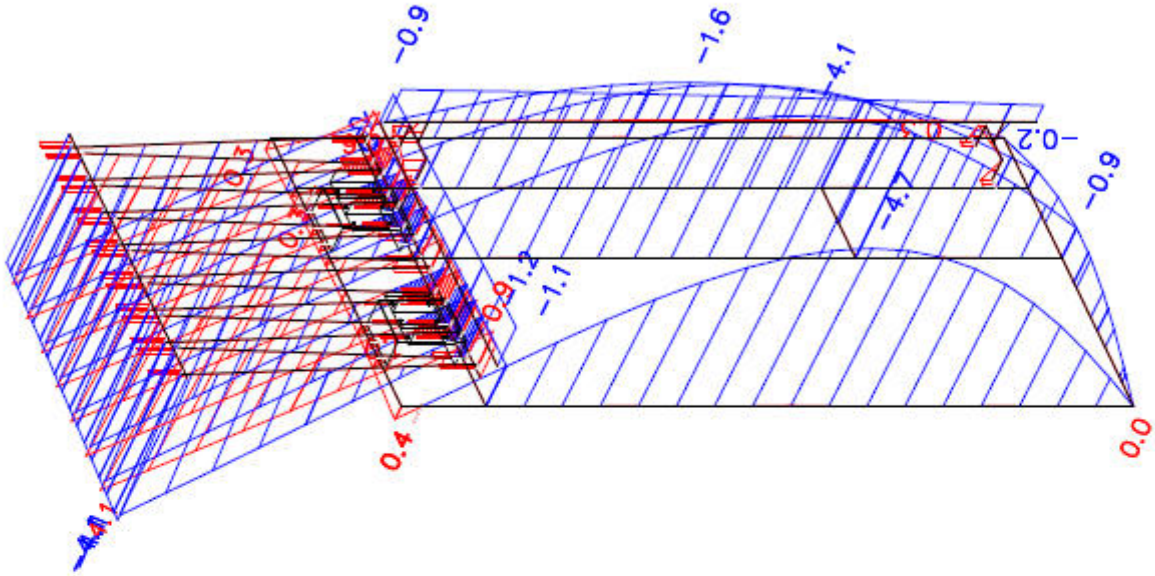

3.3. Element Deformation: NC103

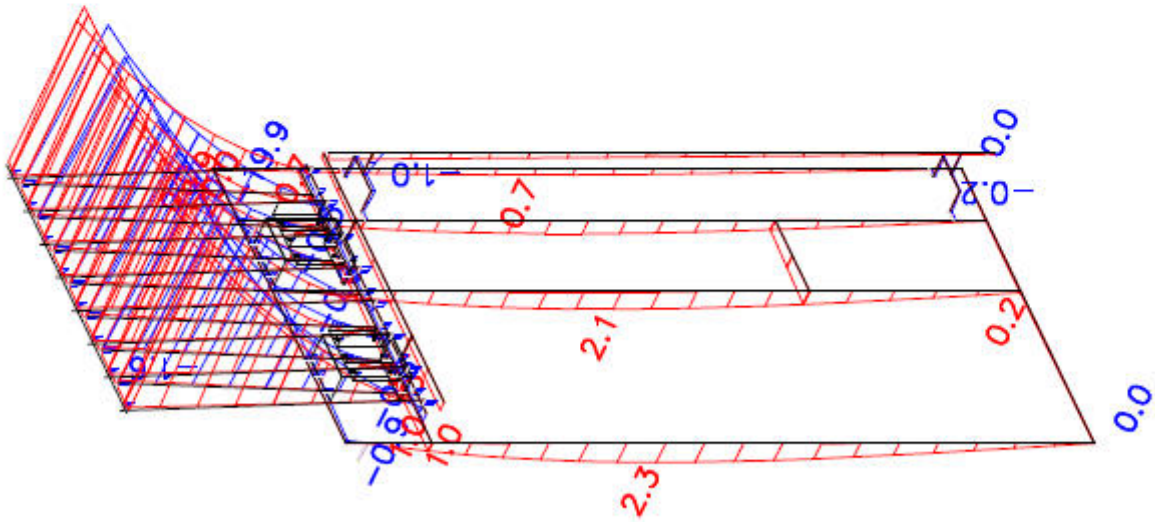

CASTLE
LETTENWEG 118, 4123 ALLSCHWIL, SWITZERLAND
TEL.: +41 (0)61 501 8210 / +41 (0)79 508 1651
REGISTERED IN SWITZERLAND | VAT REGISTRATION CHE-437.605.665

NEMETSCHEK Scia	Project	R7 Kings Cross Central, London
	Part	EP1.12b - Element with free-standing balustrade
	Description	1.655m x 3.65m - Standard bracket
	National code	EC - EN

3.4. Relative deformation: NC103

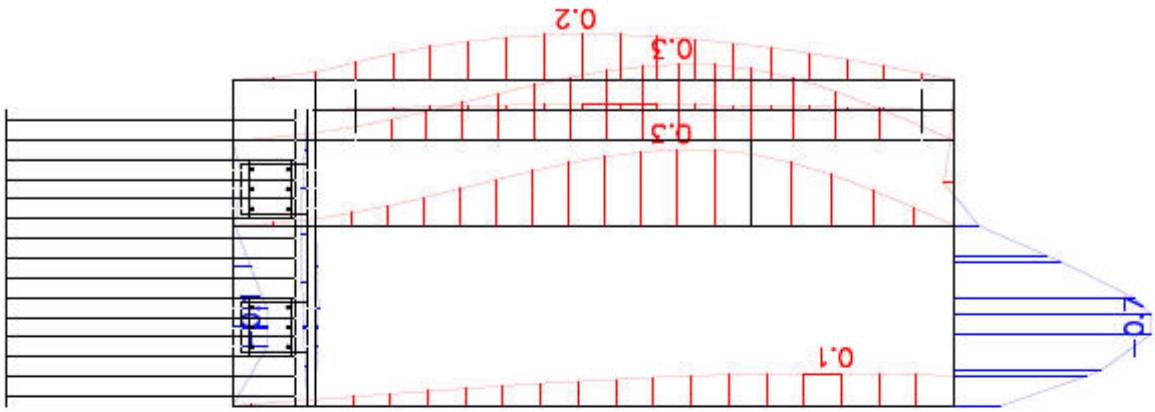

4. Stresses [N/mm²]

4.1. Stress: NC201

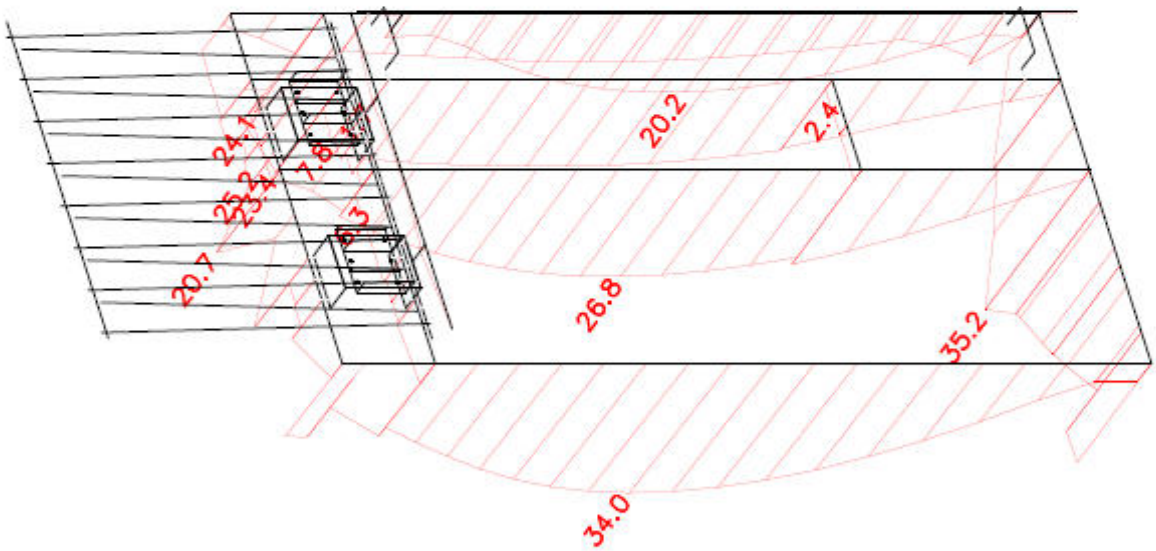

CASTLE
LETTENWEG 118, 4123 ALLSCHWIL, SWITZERLAND
TEL.: +41 (0)61 501 8210 / +41 (0)79 508 1651
REGISTERED IN SWITZERLAND | VAT REGISTRATION CHE-437.605.665

NEMETSCHEK Scia	Project	R7 Kings Cross Central, London
	Part	EP1.12b - Element with free-standing balustrade
	Description	1.655m x 3.65m - Standard bracket
	National code	EC - EN

4.2. Stress: NC202

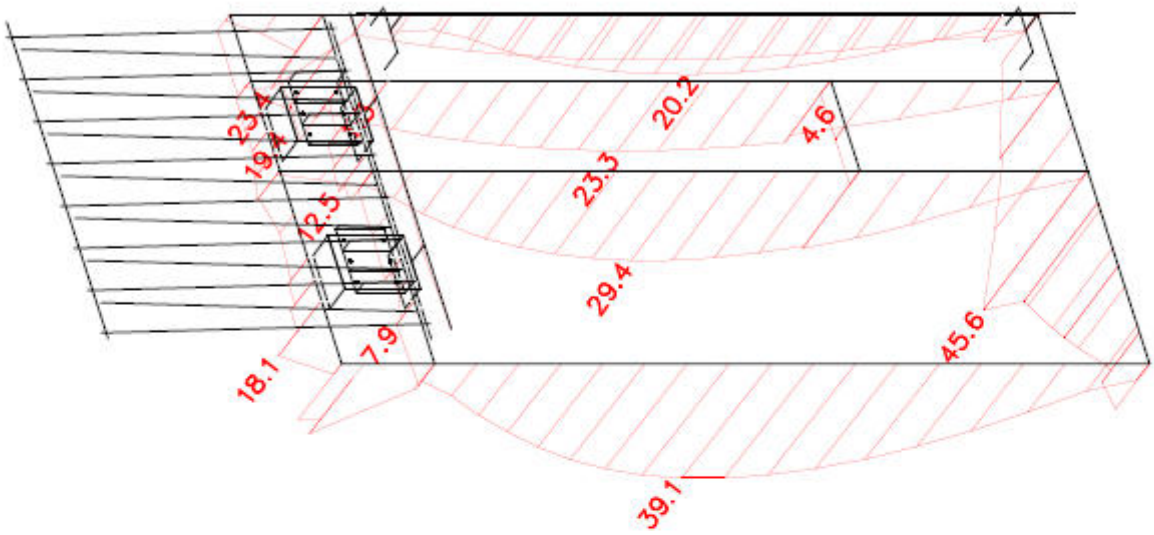

4.3. Stress: NC203

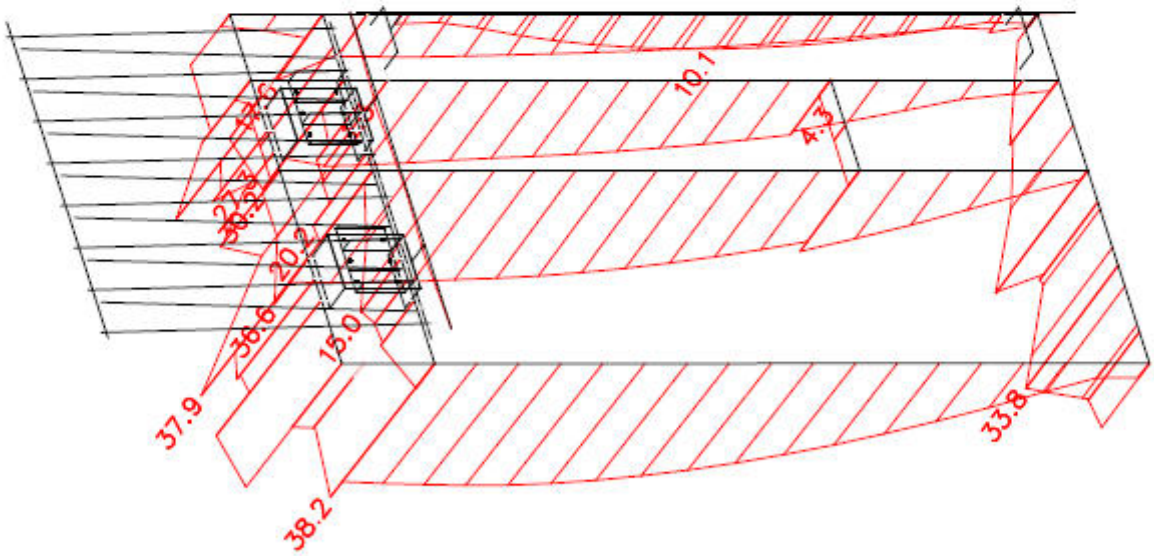

CASTLE
LETTENWEG 118, 4123 ALLSCHWIL, SWITZERLAND
TEL.: +41 (0)61 501 8210 / +41 (0)79 508 1651
REGISTERED IN SWITZERLAND | VAT REGISTRATION CHE-437.605.665

NEMETSCHEK Scia	Project	R7 Kings Cross Central, London
	Part	EP1.12b - Element with free-standing balustrade
	Description	1.655m x 3.65m - Standard bracket
	National code	EC - EN

5. Factored Reaction Forces [kN]

5.1. Reactions: NC201

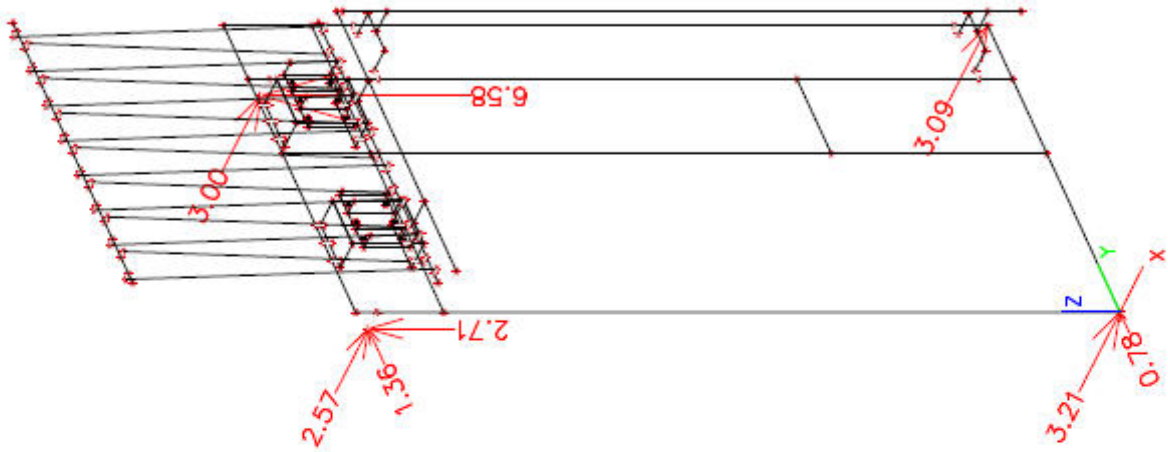

5.2. Reactions: NC202

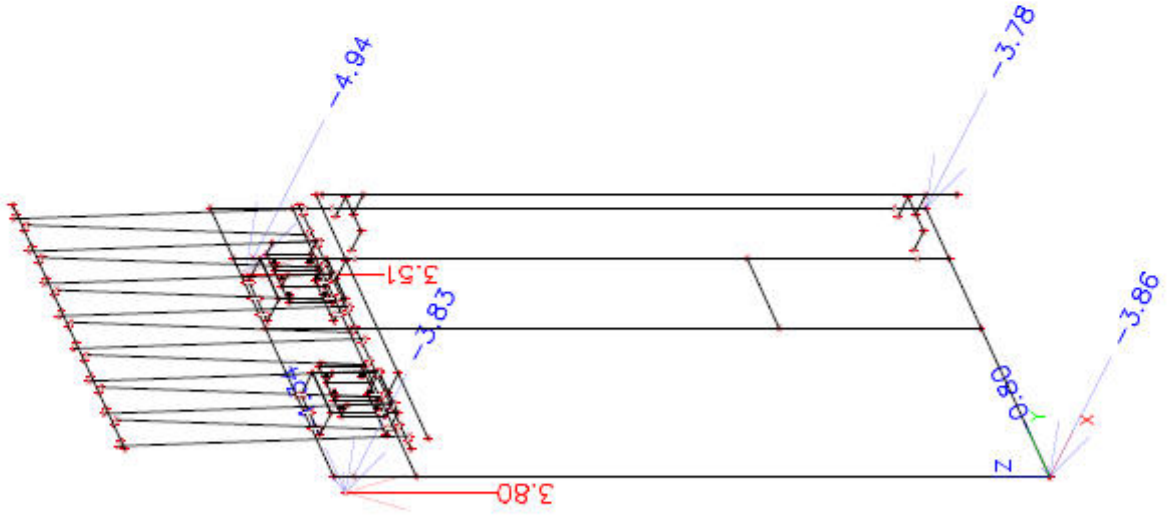

CASTLE
LETTENWEG 118, 4123 ALLSCHWIL, SWITZERLAND
TEL.: +41 (0)61 501 8210 / +41 (0)79 508 1651
REGISTERED IN SWITZERLAND | VAT REGISTRATION CHE-437.605.665

NEMETSCHEK Scia	Project	R7 Kings Cross Central, London
	Part	EP1.12b - Element with free-standing balustrade
	Description	1.655m x 3.65m - Standard bracket
	National code	EC - EN

5.3. Reactions: NC203

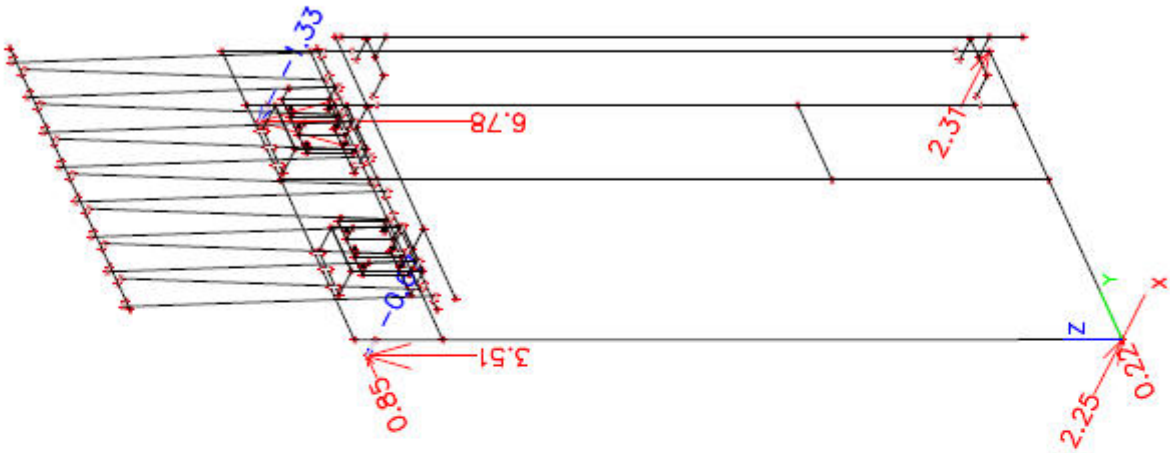

LETTENWEG 118, 4123 ALLSCHWIL, SWITZERLAND
TEL.: +41 (0)61 501 8210 / +41 (0)79 508 1651
REGISTERED IN SWITZERLAND | VAT REGISTRATION CHE-437.605.665

5 Miscellaneous checks

5.1 Structural Silicone (SSG)

Considering typical DGU pane 0.95m × 3.23m.

SSG detail [TD-110]

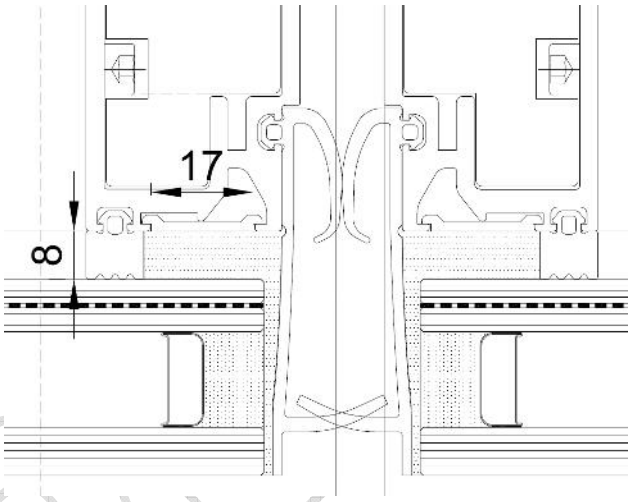

5.1.1 Static load check to ETAG 002-1

8mm × 17mm / Sika SG 500 or DC 993

Min. shear Modulus, G_0	=	*0.35*	*N/mm²*
Allowable strain, ε_{des}	=	*12.5*	*%*
Design short-term tension, σ_{des}	=	*0.14*	*N/mm²*
Design long-term tension, σ_{∞}	=	*0.014*	*N/mm²*
Design short-term shear, τ_{des}	=	*0.105*	*N/mm²*

i. Glueline thickness

$S = \sqrt{(0.95^2 + 4 \cdot 3.23^2)}/2$ = 3.26 m

$\Delta s = [(55-20)24\times10^{-6} - (80-20)9\times10^{-6}]3260$

= 0.98 mm

$e = \min\{0.98 \cdot 0.35/0.105;\ 0.98/\sqrt{(2 \cdot 0.125 + 0.125^2)};\ 6.0\}$

≥ 6.0 mm

ii. Structural bite

With glass mechanical support. Consider additional 2mm to include fabrication tolerance.

$h_c = 1.8 \cdot 0.95/(2 \cdot 0.14) + 2.0$ = 8.1 mm 0.48 < 1.0

5.2 Glass support

Glass block/chair detail [TD-111]

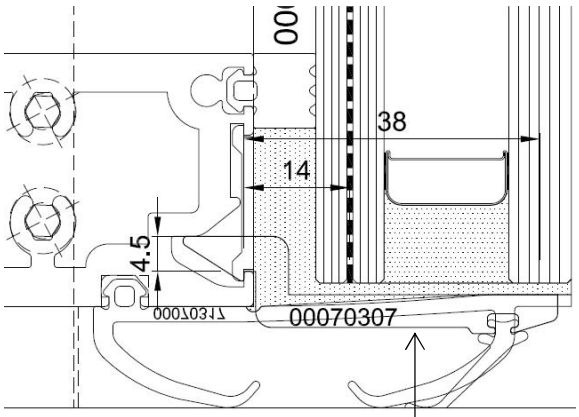

GLASS SUPPORT:
L = 100 MM
PROFILE 00070307
/ EN AW-6005A T6

i Forces

Outer lite, $P_{g1} = 0.25 \cdot 0.95 \cdot 3.22/2$ = 0.38 kN

Inner lite, $P_{g2} = 0.25 \cdot 0.95 \cdot 3.22/2$ = 0.38 kN

ii Stress check to BS EN 1999-1-1

$M_{Ed} = 1.35 \cdot 0.38(38 + 14)$ = 26.68 N·m

100mm – Profile 00070307/ EN AW-6005A T6

$M_{pl,Rd} = 1.2 \cdot 100 \cdot 4.5^2/6 \cdot 200/1.1$ = 73.64 N·m 0.36 < 1.0

5.3 Vertical fin fixing

5.3.1 Fixing @ Vision area

FIN BRACKET DETAIL @ VISION AREA [TD-110, TD-111]

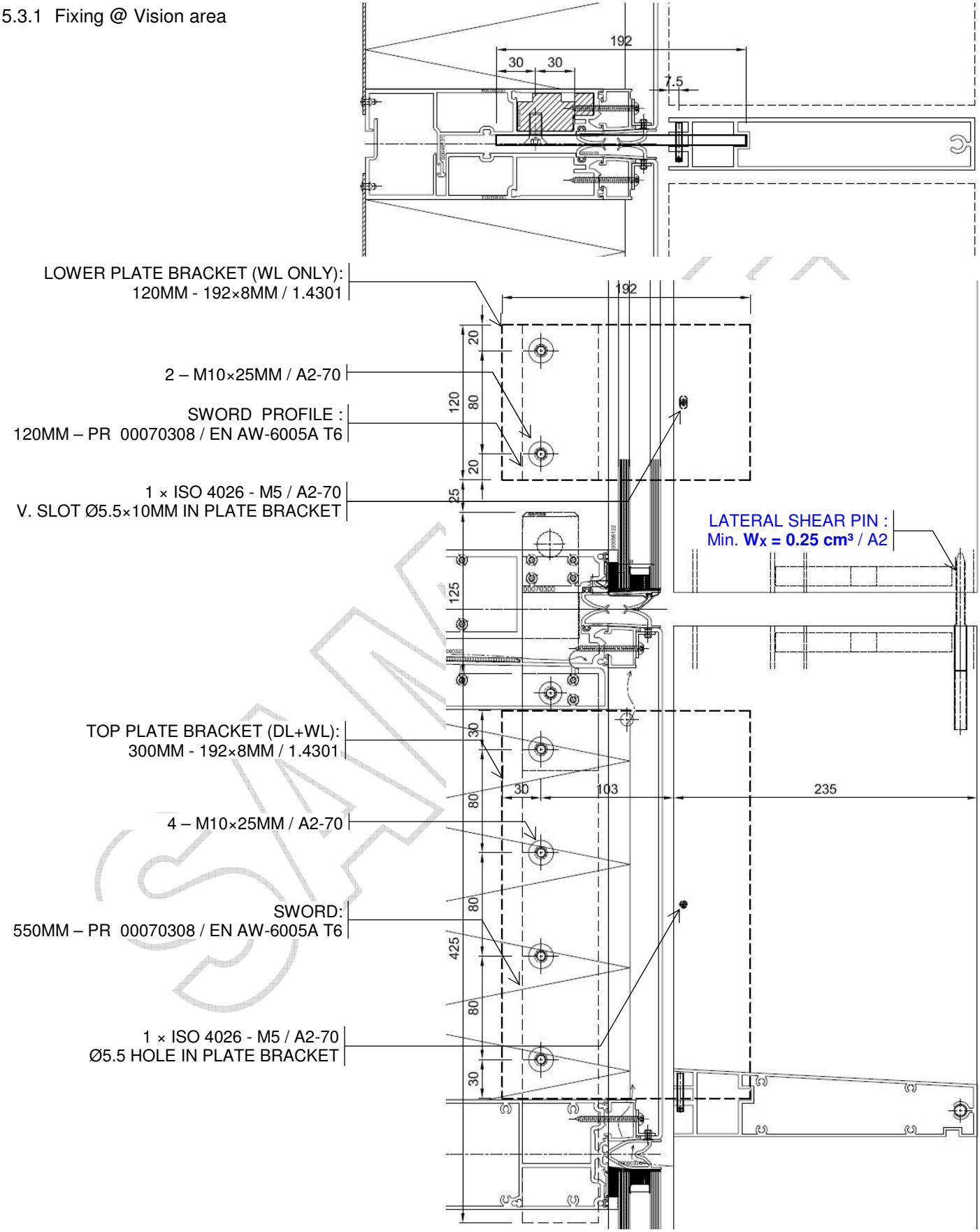

5.3.2 Fixing @ Spandrel area

FIN BRACKET DETAIL @ SPANDREL AREA [TD-110, TD-111]

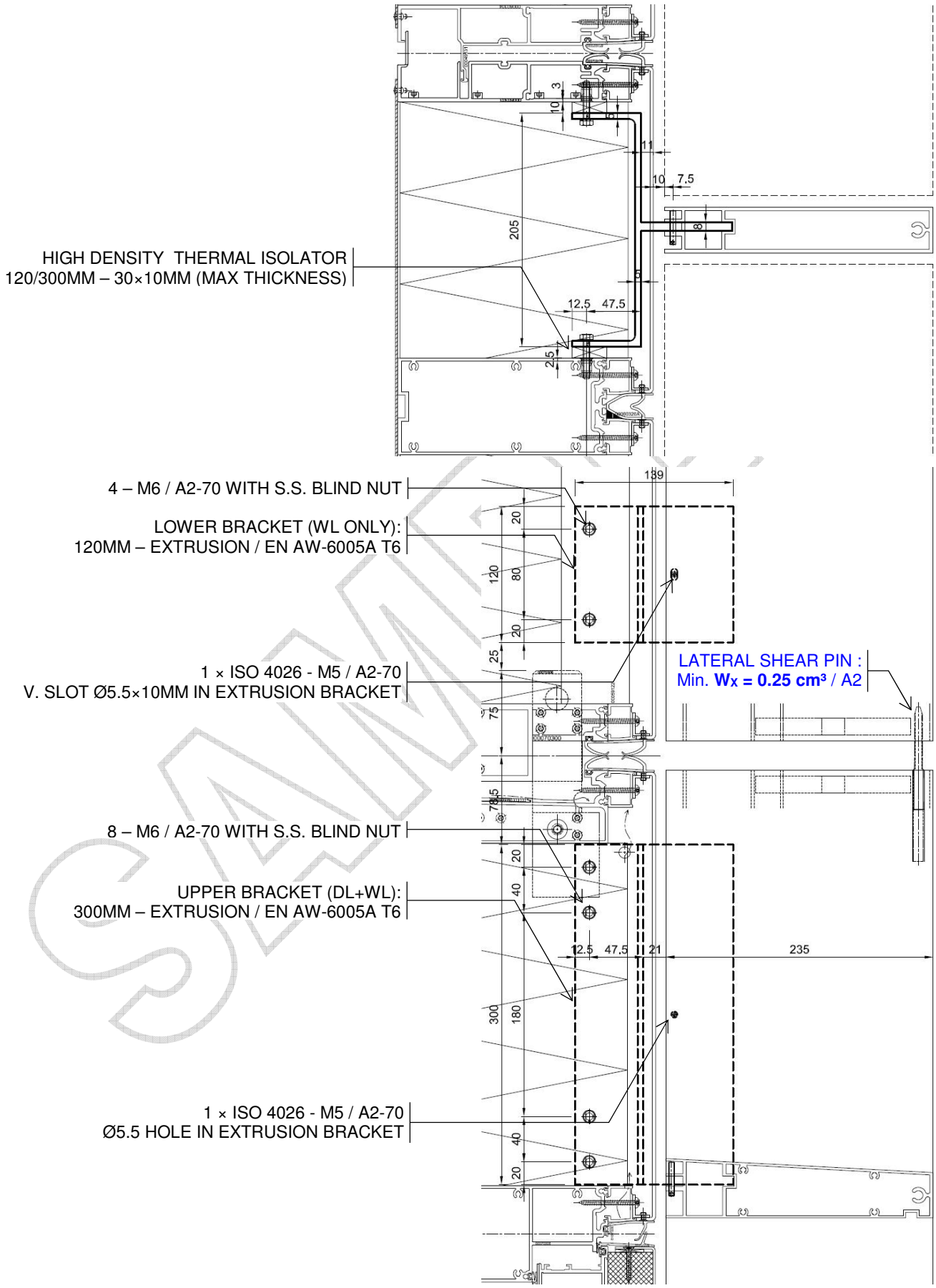

5.3.3 Forces

$V_{D,k} = 0.1 \cdot 3.65$ = 0.37 kN

$V_{L,k}$ = 1.1 kN

$H_{W,k} = 1.8 \cdot 0.24 \cdot 3.65$ = 1.58 kN

H_{Lk} = 0.5 kN

5.3.4 Fixing @ Vision area

i Upper bracket plate check to BS EN 1993-1-4

$V_{z,Ed} = 1.35 \cdot 0.37$ = 0.50 kN

$V_{y,Ed} = 1.5 \cdot 1.58$ = 2.37 kN

$M_{y,Ed} = 0.50(7.5 + 103)$ = 55.25 kN·mm

$M_{z,Ed} = 2.37(235/2 + 103)$ = 522.58 kN·mm

300mm - 192×8mm / 1.4301

$M_{y,pl,Rd} = 1.2 \cdot 300^2 \cdot 8/6 \cdot 210/1.1$ = 2749.09 kN·mm 0.02 < 1.0

$M_{z,pl,Rd} = 1.2(300-4 \cdot 10)8^2 /6 \cdot 210/1.1$ = 635.34 kN·mm 0.82 < 1.0

0.84 < 1.0

ii Upper bracket fixing screw check to BS EN 1993-1-8

$F_{vy,Ed} = 0.50/4$ = 0.13 kN

$F_{vx,Ed} = 0.50(10+103)240/(240^2 + 80^2)$

= 0.21 kN

$F_{v,Ed} = \sqrt{(0.13^2 + 0.21^2)}$ = 0.25 kN

$F_{t,Ed} = 522.58/(2/3 \cdot 30)/4$ = 6.53 kN

4 – M10 / A2-70

$F_{v,Rd} = 0.5 \cdot 57.99 \cdot 700/1.25$ = 16.24 kN 0.02 < 1.0

$F_{t,Rd} = 0.63 \cdot 57.99 \cdot 700/1.25$ = 20.46 kN 0.32 < 1.0

$F_{o,Rd} = 10/(1.5\sqrt{3}) \cdot 33.37 \cdot 200/1.875$ = 13.7 kN 0.48 < 1.0

iii Lower bracket plate check to BS EN 1993-1-4

$V_{y,Ed} = 1.5 \cdot 0.5$ = 0.75 kN

$M_{z,Ed} = 0.75(235 - 100/2 + 103)$ = 216.0 kN·mm

120mm - 192×8mm / 1.4301

$M_{z,pl,Rd} = 1.2(120-2 \cdot 10)8^2 /6 \cdot 210/1.1$ = 244.36 kN·mm 0.88 < 1.0

iv Lower bracket fixing screw check to BS EN 1993-1-8

$F_{t,Ed} = 216/(2/3 \cdot 30)/2$ = 5.4 kN

4 – M10 / A2-70

$F_{t,Rd} = 0.63 \cdot 57.99 \cdot 700/1.25$ = 20.46 kN 0.26 < 1.0

$F_{o,Rd} = 10/(1.5\sqrt{3}) \cdot 33.37 \cdot 200/1.875$ = 13.7 kN 0.39 < 1.0

5.3.5 Fixing @ Spandrel area

i Upper bracket extrusion check to BS EN 1999-1-1

$V_{z,Ed} = 1.35 \cdot 0.37 + 1.5 \cdot 1.1$ = 2.15 kN

$V_{y,Ed} = 1.5 \cdot 0.5$ = 0.75 kN

$T_{Ed} = 2.15(17.5 + 11 + 5/2)$ = 66.65 kN·mm

$M_{y,Ed} = 0.75(235/2 + 21 + 5/2)$ = 105.75 kN·mm

300mm - U110/205×5mm / EN AW-6005A T6

$(I_t/c) = 300^2 \cdot 5^2 / (3 \cdot 300 + 1.8 \cdot 5)$ = 2.47 cm^3

$T_{Rd} = 2.47/\sqrt{3} \cdot 200/1.1$ = 259.28 kN·mm <u>0.26 < 1.0</u>

$M_{y,pl,Rd} = 1.2 \cdot 300 \cdot 5^2 / 6 \cdot 200/1.1$ = 272.73 kN·mm <u>0.39 < 1.0</u>

ii Upper bracket fixing screw check to BS EN 1993-1-8

$F_{vy,Ed} = 2.15/8$ = 0.27 kN

$F_{vx,Ed} = 2.15(10+103)260/(260^2 + 180^2)/2 + 522.58 \cdot /205/4$

= 0.95 kN

$F_{v,Ed} = \sqrt{(0.27^2 + 0.95^2)}$ = 0.99 kN

8 – M6 / A2-70

$\beta_p = 9 \cdot 6/(8 \cdot 6 + 3 \cdot 18)$ = 0.53

$F_{v,Rd} = 0.53 \cdot 0.5 \cdot 20.12 \cdot 700/1.25$ = 2.98 kN <u>0.33 < 1.0</u>

$\alpha_b = 12.5/(3 \cdot 7)$ = 0.60

$F_{b,Rd} = 0.6 \cdot 1.5 \cdot 6(2.5 - 1.5/2)170/1.25$ = 1.28 kN <u>0.77 < 1.0</u>

5.3.6 Locking pins

i Vertical shear pin check

Double shear,

$F_{v,Ed} = 2.15/2$ = 1.08 kN

1 – ISO 4026 M5 / A2-70

$F_{v,Rd} = 0.5 \cdot 14.18 \cdot 700/1.25$ = 3.97 kN <u>0.27 < 1.0</u>

$F_{b,Rd} = 1.5 \cdot 5 \cdot 2.0 \cdot 170/1.25$ = 2.04 kN <u>0.53 < 1.0</u>

ii Lateral shear pin check

$F_{v,Ed} = 1.5 \cdot 1.58/2$ = 1.18 kN

$M_{Ed} = 1.18(26+15)$ = 48.38 kN·mm

$W_{el} \geq 48.38/(210/1.1)$ = 0.25 cm^3

Provide: Pin with elastic modulus, W_x = 0.25 cm^3 (minimum) / A2 or 1.4301

5.4 Horizontal fin fixing

Detail [TD-111]

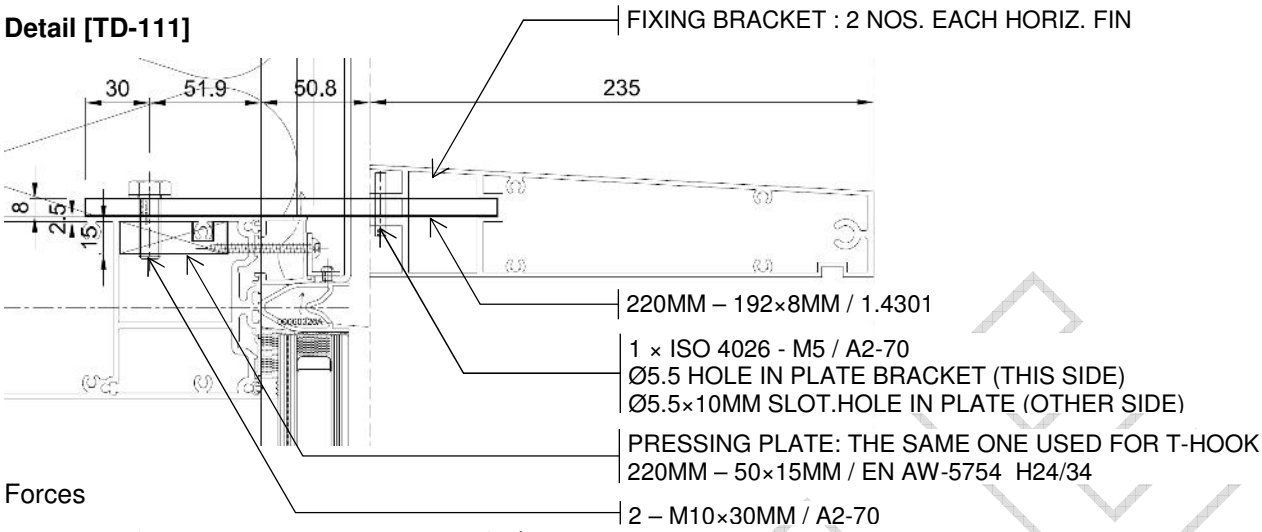

5.4.1 Forces

$V_{D,k} = 0.1 \cdot 1.5$ = 0.15 kN

Downforce, $V_{L,k}$ = +1.1 kN

Uplift, $V_{L,k}$ = -0.5 kN

w_{net} = +/- 1.8 kN/m²

5.4.2 Plate bracket check to BS EN 1993-1-4

$V_{y,Ed} = 1.35 \cdot 0.15/2 + 1.5 \cdot 1.1$ = 1.75 kN

$M_{z,Ed} = 1.75(235 - 100/2 + 50.8 + 51.9/3)$

= 442.92 kN·mm

220mm - 192×8mm / 1.4301

$M_{z,pl,Rd} = 1.2 \cdot 220 \cdot 8^2 / 6 \cdot 210/1.1$ = 537.60 kN·mm <u>0.82 < 1.0</u>

5.4.3 Screw fixing check to BS EN 1993-1-8

i Downforce: 1.35(D) + 1.5(L)

$F_{t,Ed} = 442.92/(\frac{2}{3} \cdot 51.9)/2$ = 6.4 kN <- governs!

ii Uplift: 1.0(D) + 1.5(W)

$V_d = (-1.0 \cdot 0.15 + 1.5 \cdot 1.8 \cdot 0.235 \cdot 1.5)/2$ = 0.40 kN

$F_{t,Ed} = 0.40(235/2 + 50.8 + 51.9 + 20)/20/2$

= 2.40 kN

iii Uplift: 1.0(D) + 1.5(L)

$V_d = -1.0 \cdot 0.15/2 + 1.5 \cdot 0.5$ = 0.68 kN

$F_{t,Ed} = 0.68(235 - 100/2 + 50.8 + 51.9 + 20)/20/2$

= 5.23 kN

4 – M10 / A2-70

$F_{t,Rd} = 0.9 \cdot 57.99 \cdot 700/1.25$ = 29.23 kN <u>0.22 < 1.0</u>

$F_{o,Rd} = 15/(1.5\sqrt{3}) \cdot 33.37 \cdot 160/1.875$ = 16.44 kN <u>0.39 < 1.0</u>

5.5 Horizontal fin adjustments

5.5.1 Upper adjustment screws

Imposed load, V_k = *1.1 kN*

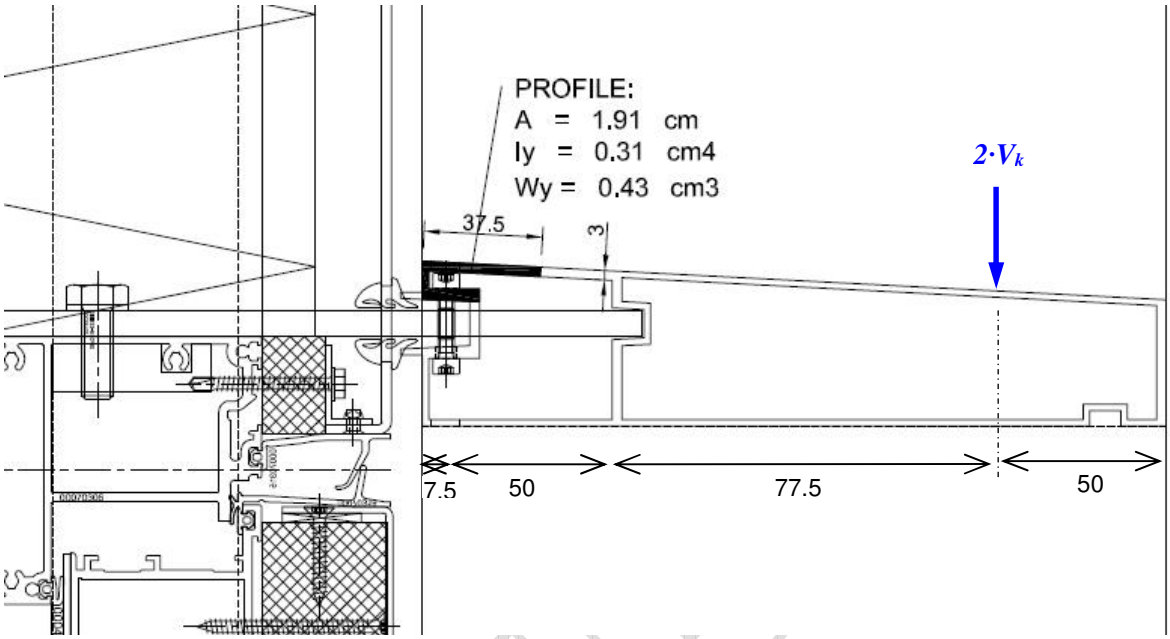

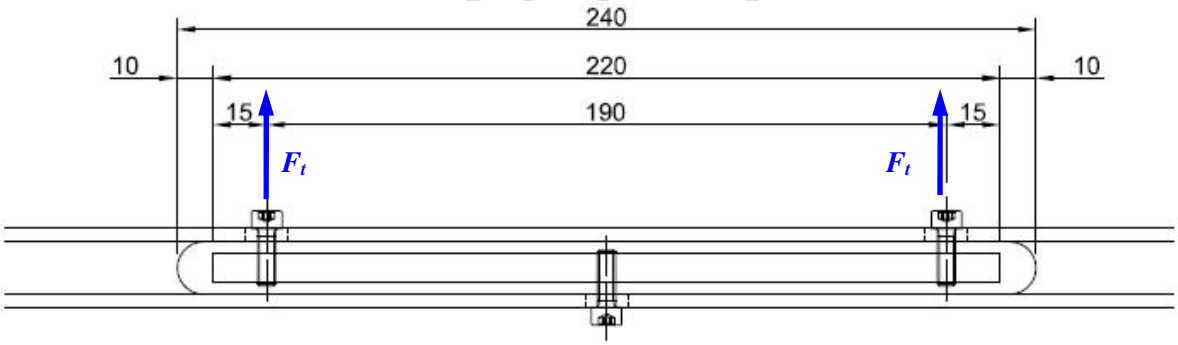

i Screw check to BS EN 1999-1-1 and AAMA TIR-A9

$F_{t,Ed}$ = 2·1.5·1.1(77.5/50)/2 = 2.56 kN

2 × M5 / A2-70

$F_{t,Rd}$ = 0.9·14.18·700/1.25 = 7.15 kN <u>0.36 < 1.0</u>

$F_{o,Ed}$ = 8/(0.8√32)12.57·520/1.5/1.25

= 20.13 kN <u>0.13 < 1.0</u>

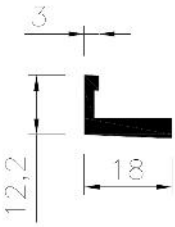

PROFILE 1a:
A = 0.88 cm
Iy = 0.09 cm4
Wy = 0.1 cm3

ii Fin profile check

$M_{1,Ed}$ = 2.56·25(240-25)/240 = 57.33 kN·mm - *Moment @ rigid end supports*

$M_{1a,Ed}$ = 2.56·25² /240 = 6.67 kN·mm - *Moment @ point of load*

Profile 1 & 1a / EN AW-6060 T6

$M_{1,pl,Rd}$ = 1.2·0.43·140/1.1 = 65.67 kN·mm <u>0.87 < 1.0</u>

$M_{1a,el,Rd}$ = 0.10·140/1.1 = 12.73 kN·mm <u>0.52 < 1.0</u>

5.5.2 Lower adjustment screw

Wind load, w_k = 1.8 kN·m²

Imposed load, V_k = 0.5 kN

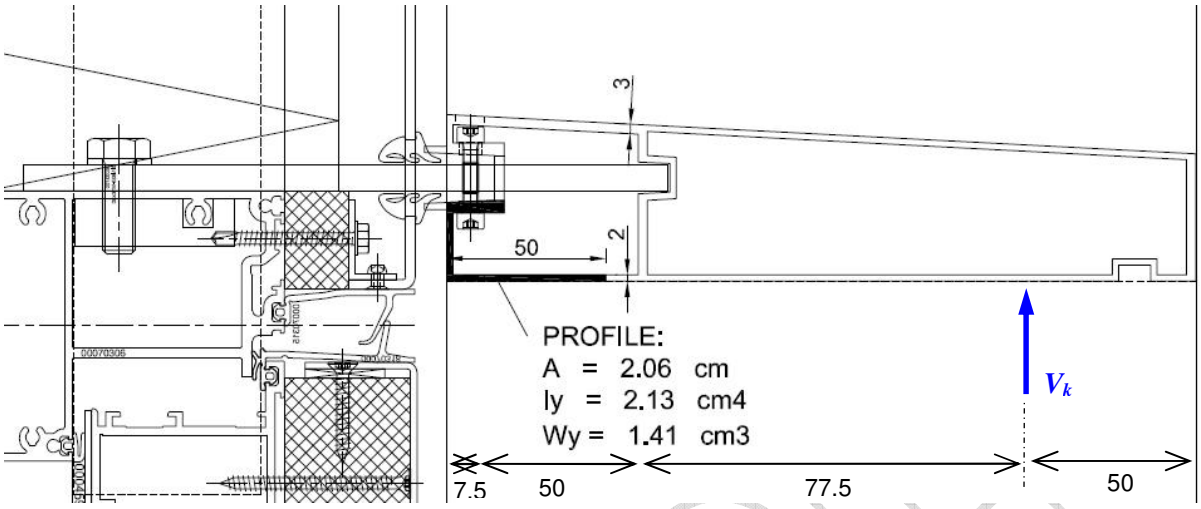

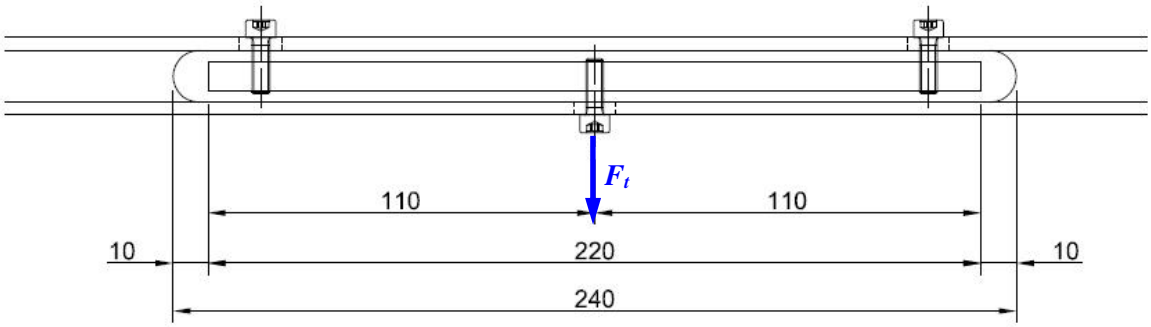

i Screw check to BS EN 1999-1-1 and AAMA TIR-A9

$F_{t1,Ed}$ = 1.5·1.8·1.5·0.235² /4/0.05 = 1.11 kN

$F_{t2,Ed}$ = 1.5·0.5(77.5/50) = 1.16 kN

2 × M5 / A2-70

$F_{t,Rd}$ = 0.9·14.18·700/1.25 = 7.15 kN 0.16 < 1.0

$F_{o,Ed}$ = 8/(0.8√32)12.57·520/1.5/1.25

= 20.13 kN 0.06 < 1.0

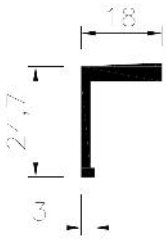

PROFILE 2a:
A = 1.12 cm
Iy = 0.64 cm4
Wy = 0.36 cm3

ii Fin profile check

$M_{2,Ed}$ = 1.16·240/8 = 34.8 kN·mm - Moment @ rigid end supports

$M_{2a,Ed}$ = 1.16·240/8 = 34.8 kN·mm - Moment @ point of load

Profile 2 & 2a / EN AW-6060 T6

$M_{2,el,Rd}$ = 1.41·140/1.1 = 179.45 kN·mm 0.19 < 1.0

$M_{2a,el,Rd}$ = 0.36·140/1.1 = 45.82 kN·mm 0.76 < 1.0